HYPER GT2

Nitro

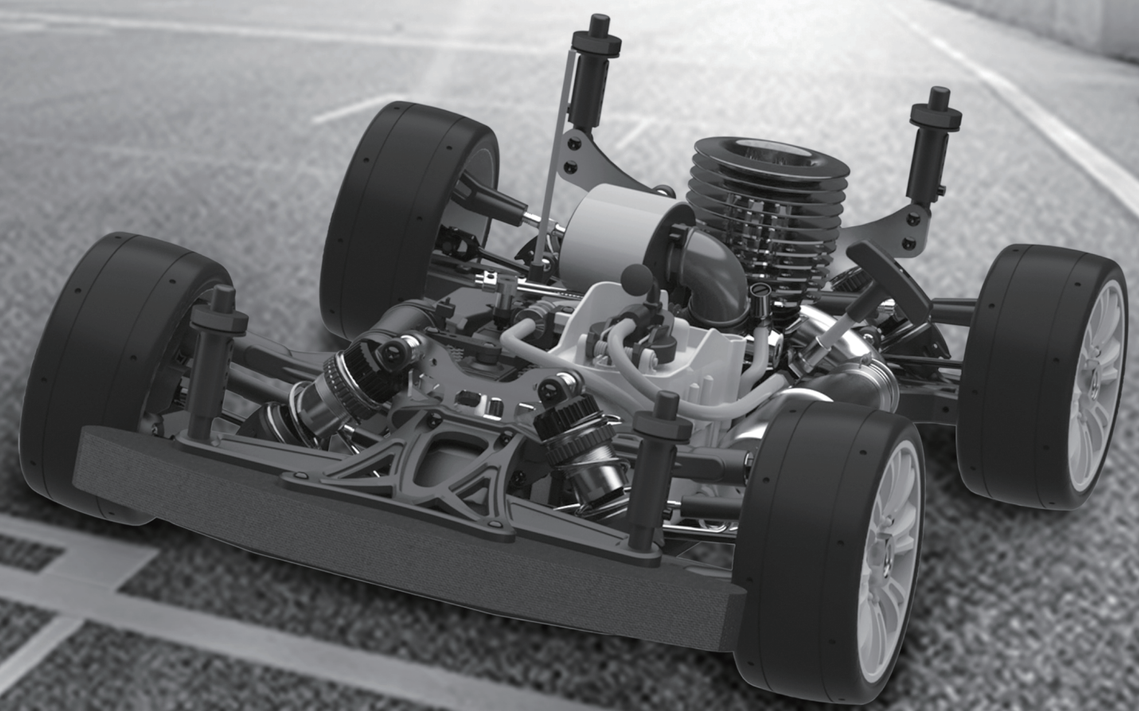

HoBao

HoBao Racing Inc.
No. 34, Lane 112, Szu Yuan Road,Hsin Chuang District,
New Taipei City, Taiwan 24250
Phone: +886-2-2996-2229
Email: hobao@hobao.com.tw

HoBao Racing USA
7607 Grissom Road, Suite
#107, San Antonio, TX 78251, US
Tel: +1-888-687-6780
Email: info@hobao-usa.com

HoBao Racing Direct eShop: http://eshop.hobao-racing.com

INSTRUCTION MANUAL

Made in Taiwan

HYPER GT2

REQUIRED

Radio Control Equipment Set

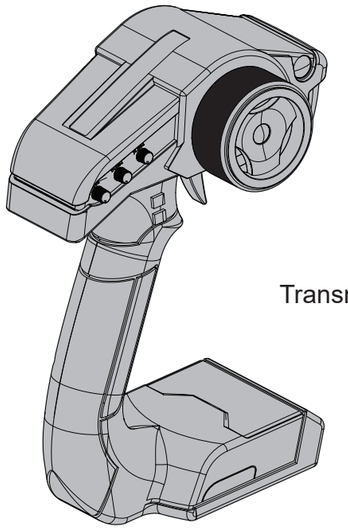

Transmitter

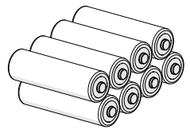

8 AA Size Batteries
For Transmitter

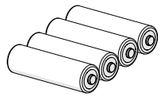

4 AA Size Batteries
For Receiver

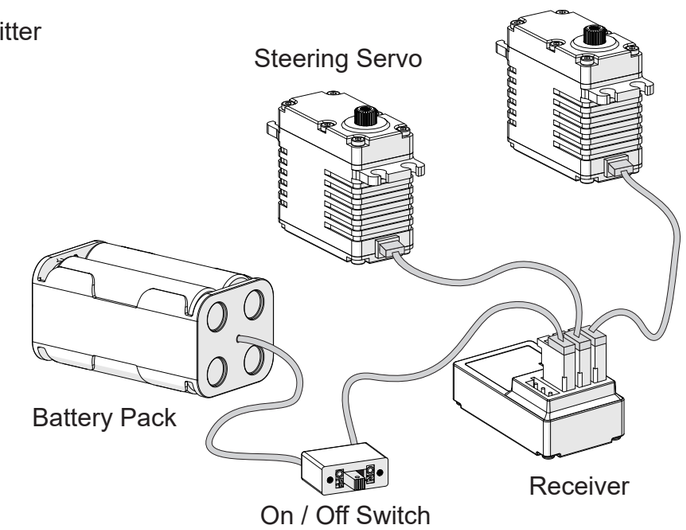

Hyper / Mac Engine Series

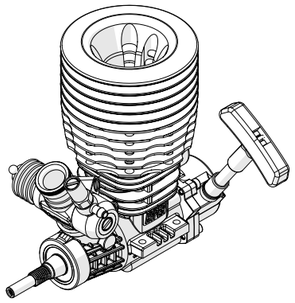

Required For Engine Starting

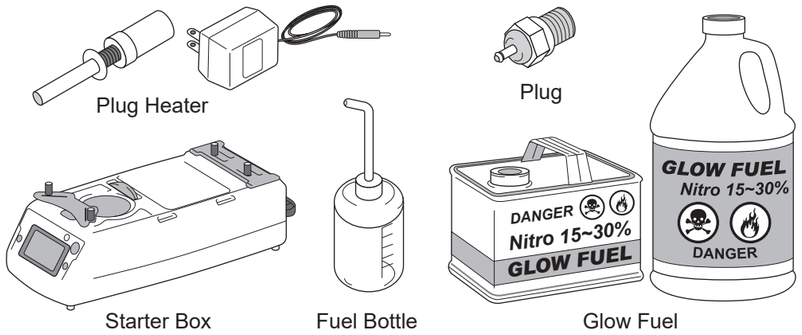

Tools Recommended

Hex Wrench

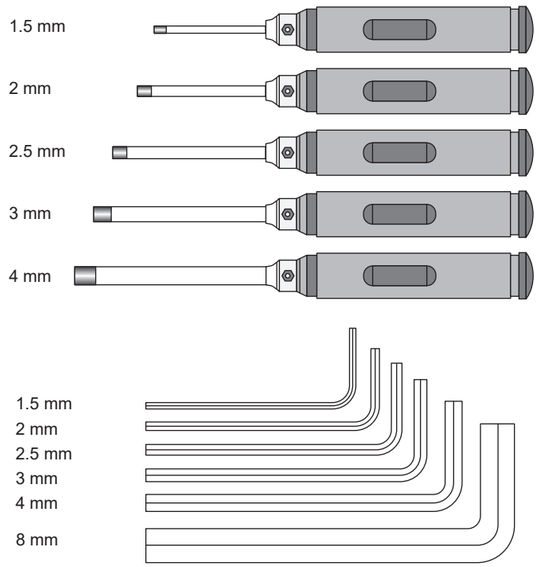

Screwdriver

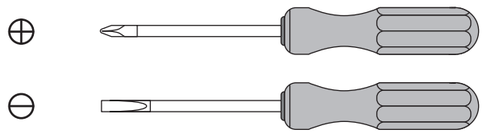

Wrench

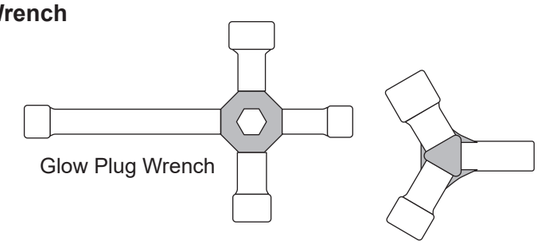

Instant Cement

Rubber Cement

Thread Lock

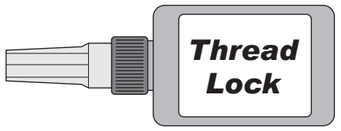

Long Nose Pliers

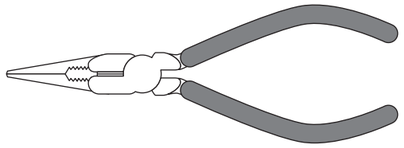

Side Cutter

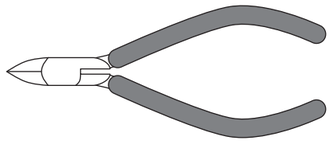

Curved Scissor

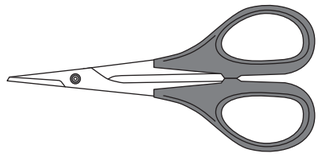

Modeling Knife

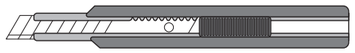

Tweezers

Reamer

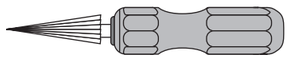

Grease

Silicone Oil

1

94117
4.1x8x0.1mm x8
Washer

87005-2
6.1x13.9x0.15mm x4
Washer

36101
5.8x1.9mm x4
O-ring

38404
M4x4 x2
Set Screw

31315
M3x15 x8
F/H Screw

39057
2.5x10.8mm x4
Shaft

84076
8x16x5mm x4
Ball Bearing

Front / Rear Differential Assembly x2

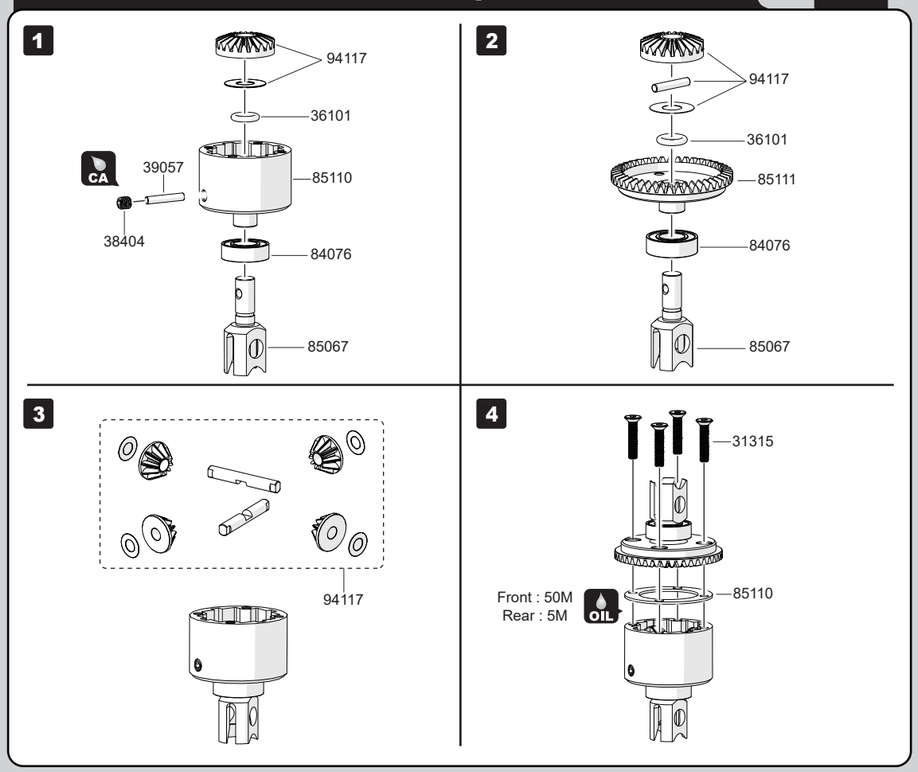

2

38504
M5x4 x2
Set Screw

33315
M3x15 x4
B/H Screw

84076
8x16x5mm x4
Ball Bearing

Front / Rear Gear Box Assembly x2

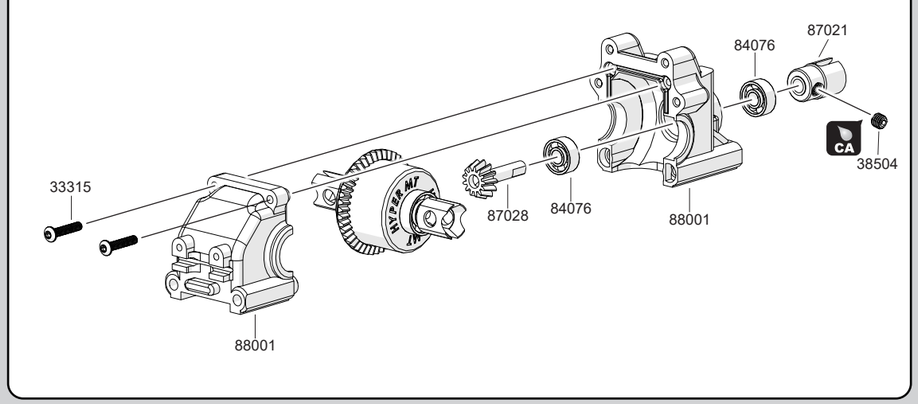

3

33315
M3x15 x4
B/H Screw

Alum Front Lower Arm Holder Assembly

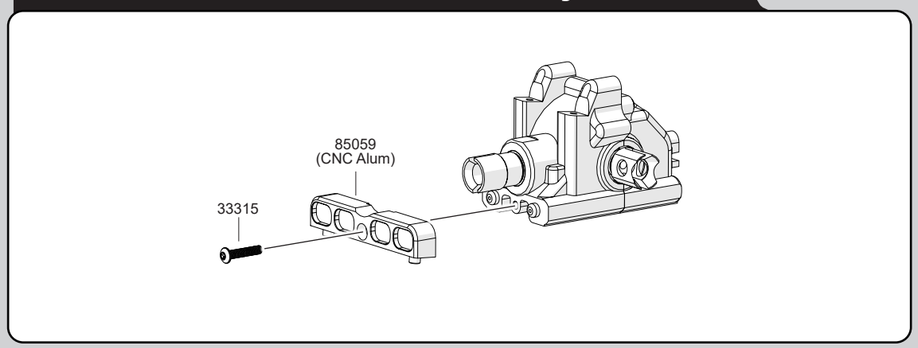

4

31312
M3x12 x2
F/H Screw

33308
M3x8 x1
B/H Screw

84078
6x10x3mm x4
Ball Bearing

Servo Saver Assembly 1

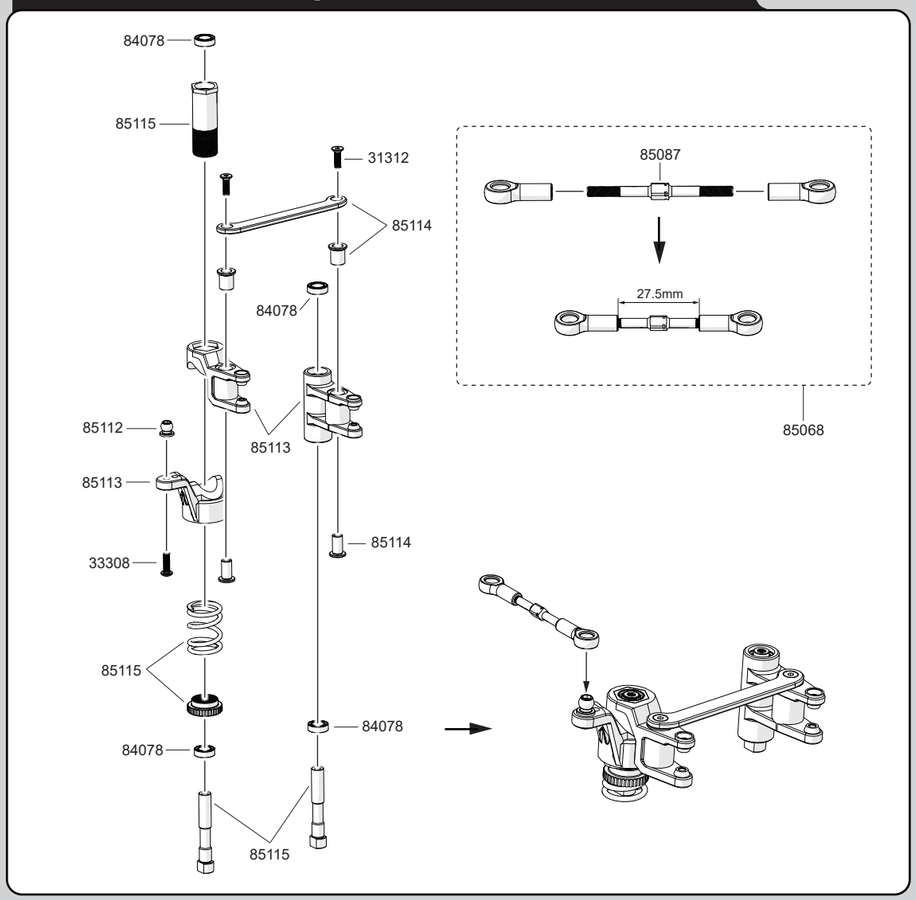

5

32312
M3x12 x4
Cap Screw

33412
M4x12 x2
B/H Screw

Servo Saver Assembly 2

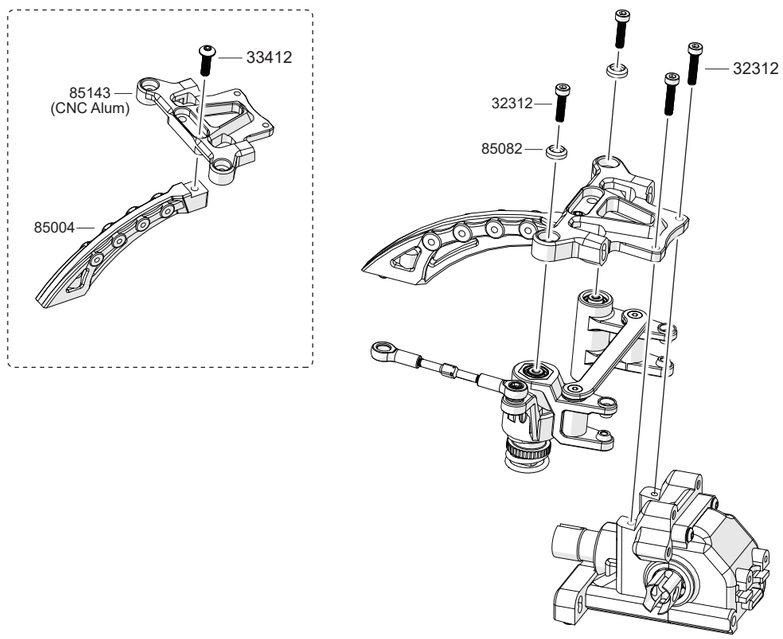

6

33315
M3x15 x2
B/H Screw

32320
M3x20 x2
Cap Screw

Front Shock Tower Assembly

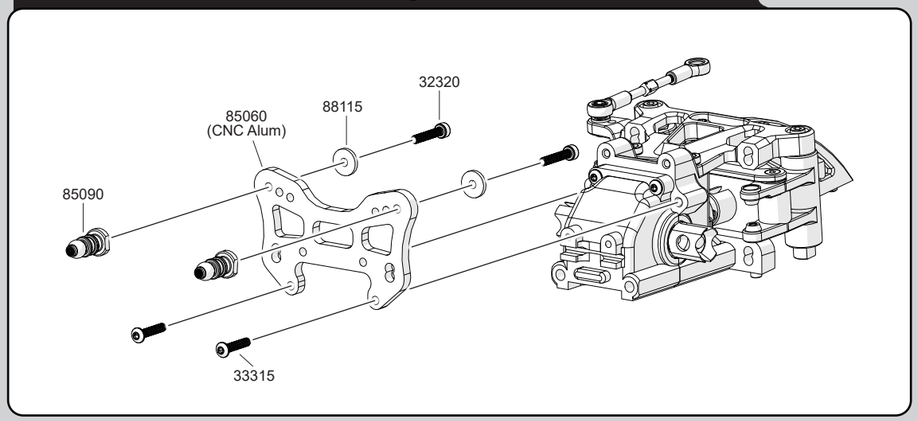

7

31320
M3x20 x2
F/H Screw

Steering Linkage Assembly

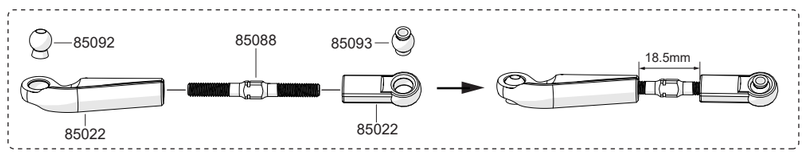

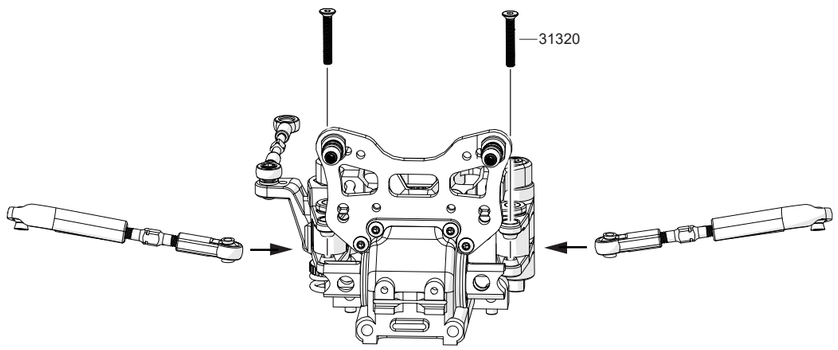

8

38504
M5x4 x2
Set Screw

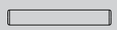

85146
2.5x16.8mm x2
Shaft

84076
8x16x5mm x4
Ball Bearing

Universal Joint Shaft And Wheel Hex Hubs Assembly

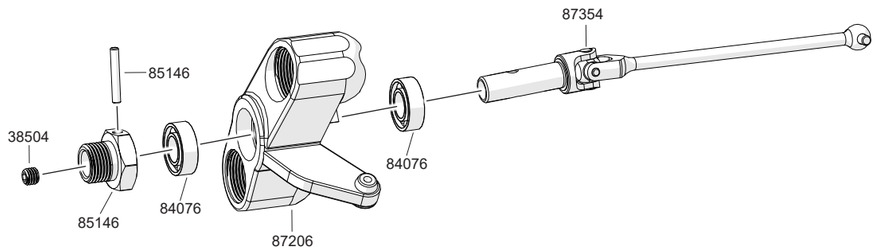

9

87209
Set Screw

36813
6.3x11.8x0.3mm
Washer

85152
M4x10 x2
Set Screw

Front Ball Steering Assembly

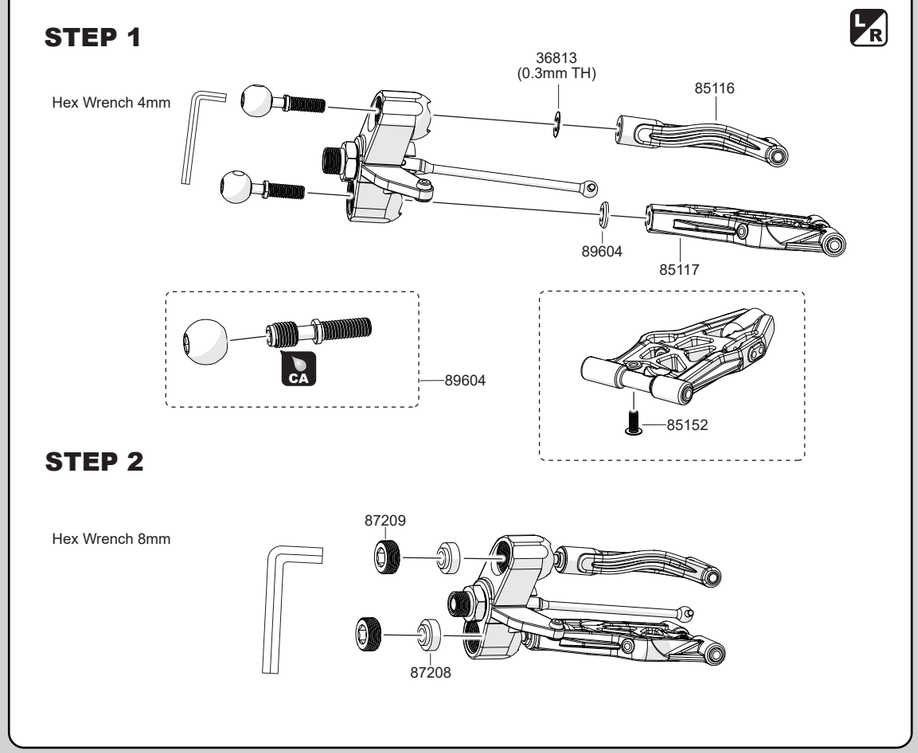

10

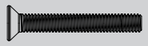

31322
M3x20 x2
F/H Screw

Front Suspension Arm Assembly

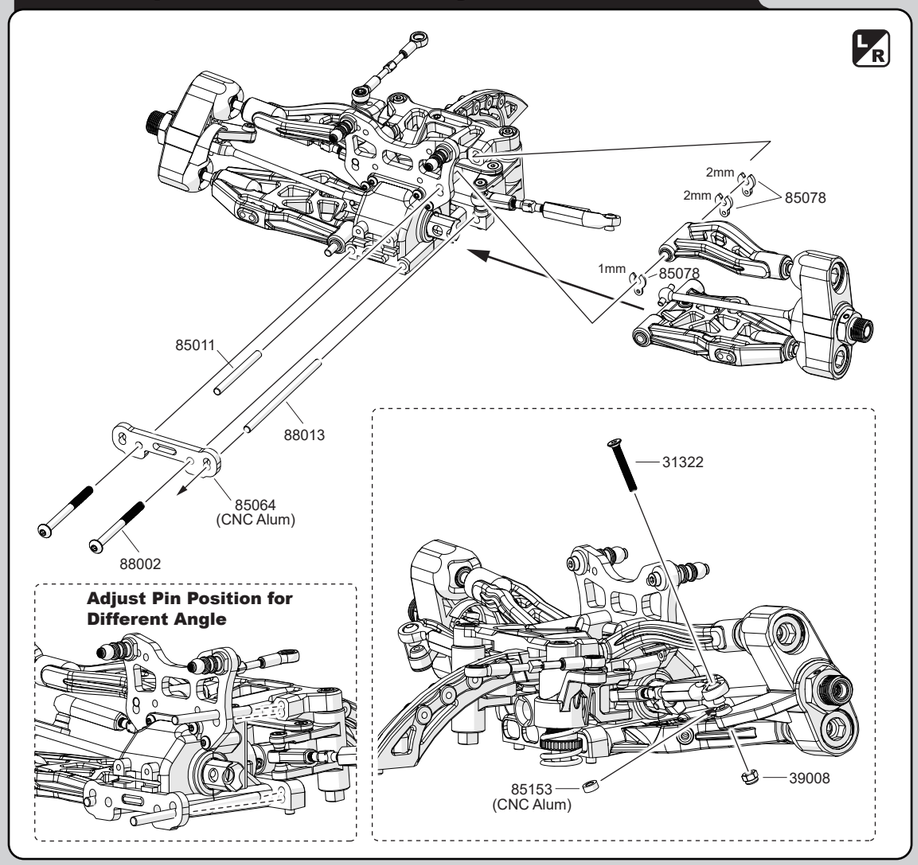

11

32320
M3x20 x2
Cap Screw

38303
M3x3 x2
Set Screw

Front Sway Bar Assembly

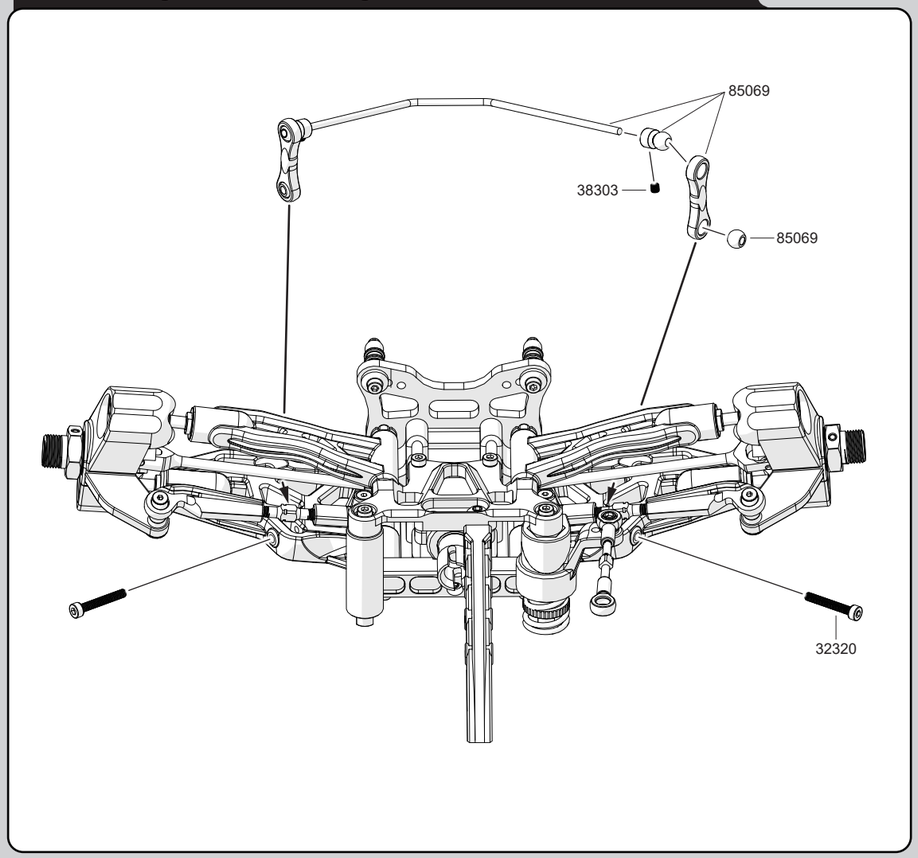

12

38304
M3x4 x2
Set Screw

33310
M3x10 x2
B/H Screw

Rear Sway Bar Assembly

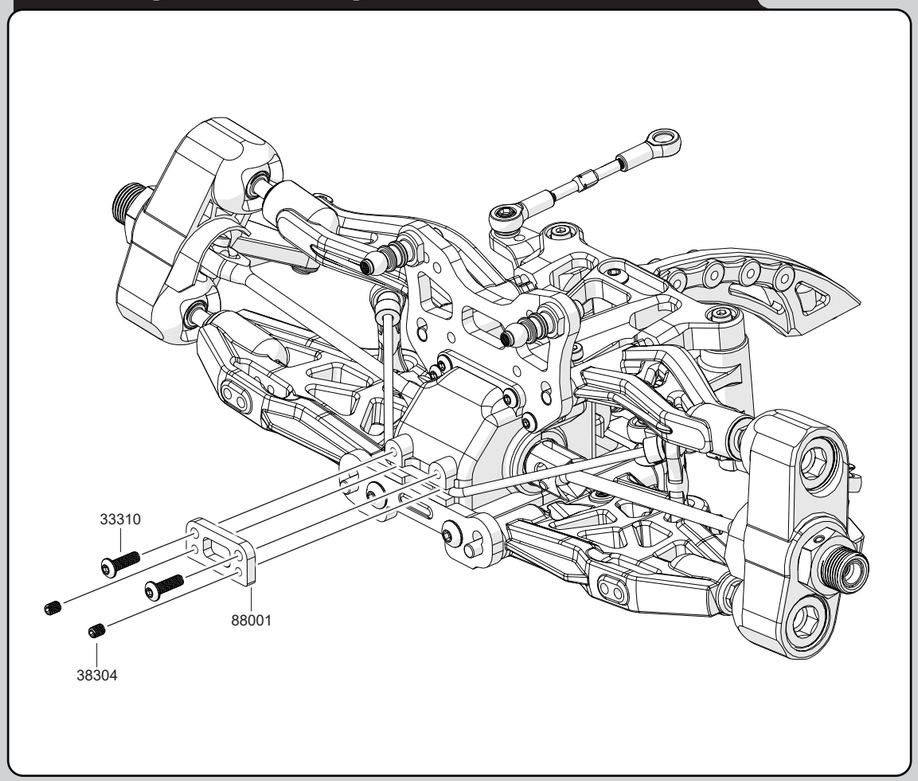

13

90071
M2.6 Nut x4

90071
3.1x7x0.25mm x4
Washer

90036
O-Ring Shield

90036
4x8mm x8
O-Ring

90036
4.05x7.98x1.2mm x4
Washer

85091
6.8mm x4
Ball

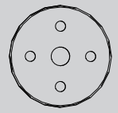

90047
3x17x2.4mm

Front / Rear Shock Absorber Assembly

x4

No. 90082
Shock Set

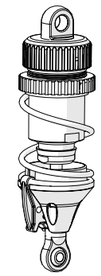

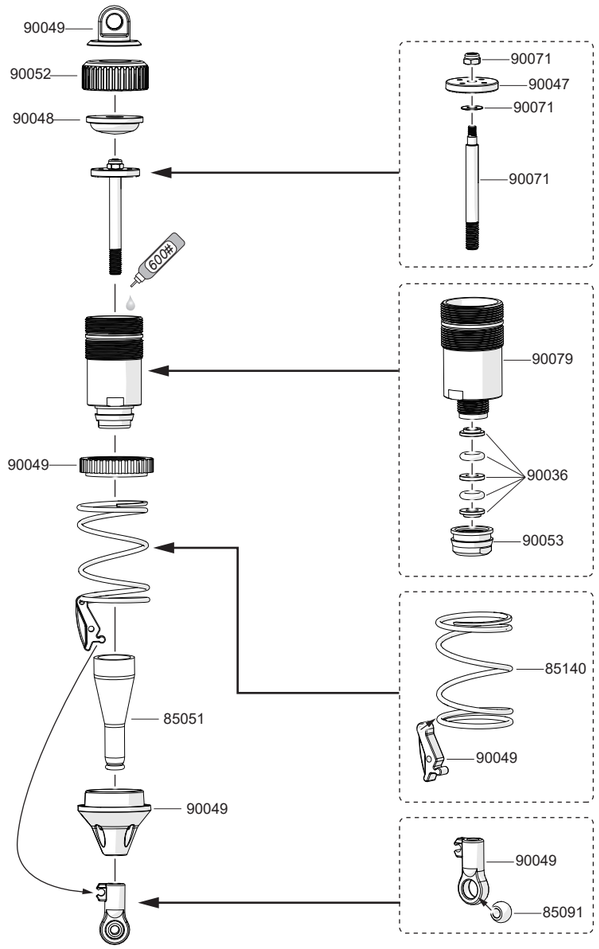

14

32310
M3x10 x2
Cap Screw

Front Shock Assembly

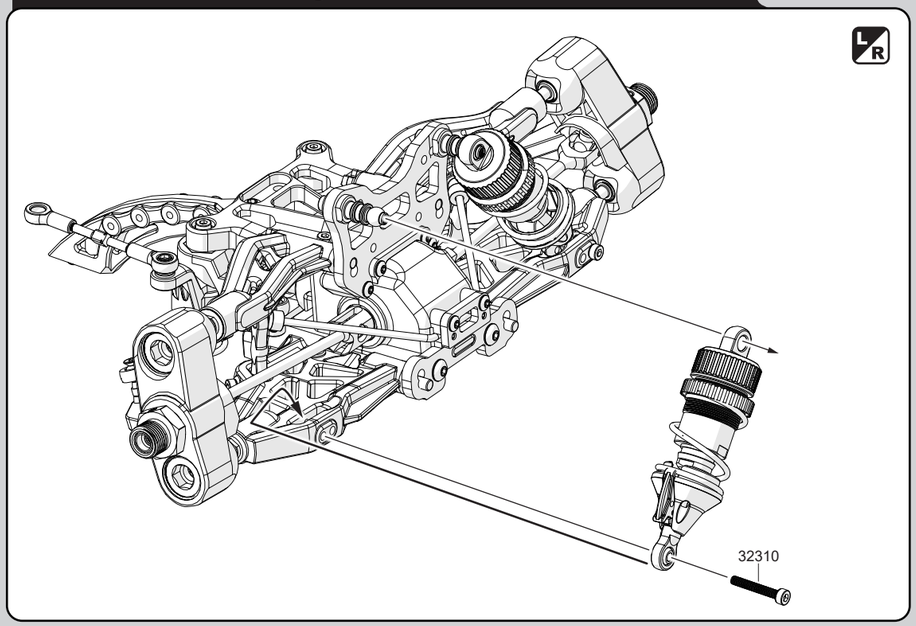

15

36212
M2.6x12 x2
Cap Screw

33312
M3x12 x8
B/H Screw

33315
M3x15 x2
B/H Screw

31310
M3x10 x2
F/H Screw

Front Bumper Assembly

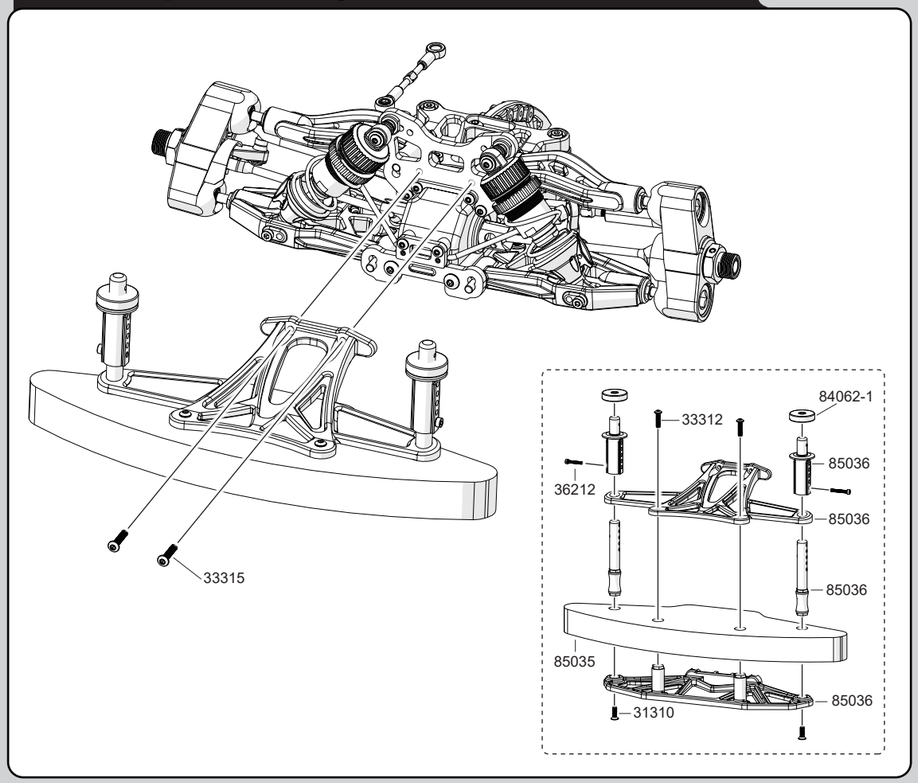

16

31410
M4x10 x4
F/H Screw

31414
M4x14 x2
F/H Screw

31416
M4x16 x4
F/H Screw

Front Clip Assembly

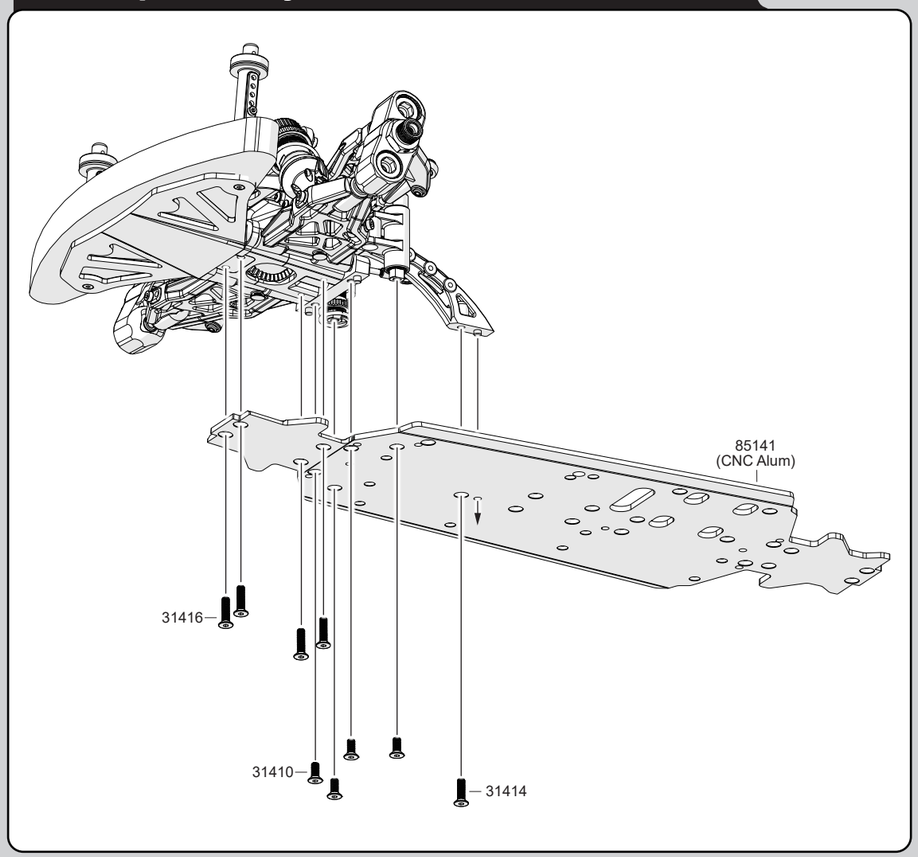

17

33315
M3x15 x3
B/H Screw

33318
M3x18 x2
B/H Screw

Gear Box And Lower Arm Holder Assembly

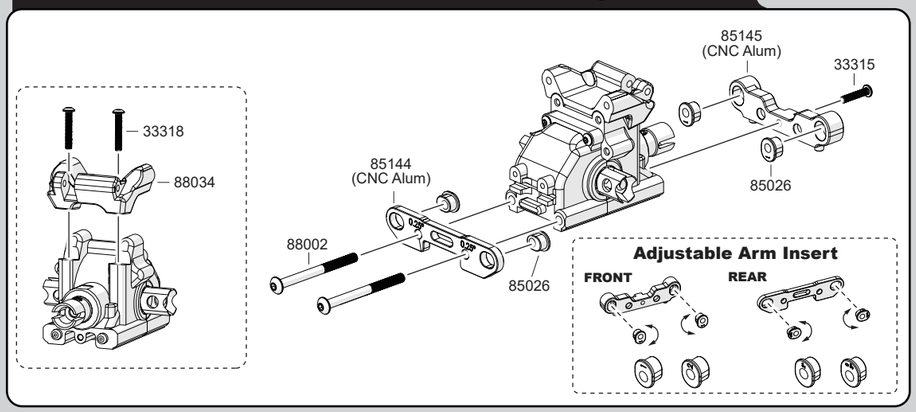

18

39008
M3 Nut x2

38504
M5x4 x2
Set Screw

84076
8x16x5mm x4
Ball Bearing

32325
M3x25 x2
Cap Screw

Rear Hex Hub Assembly 1

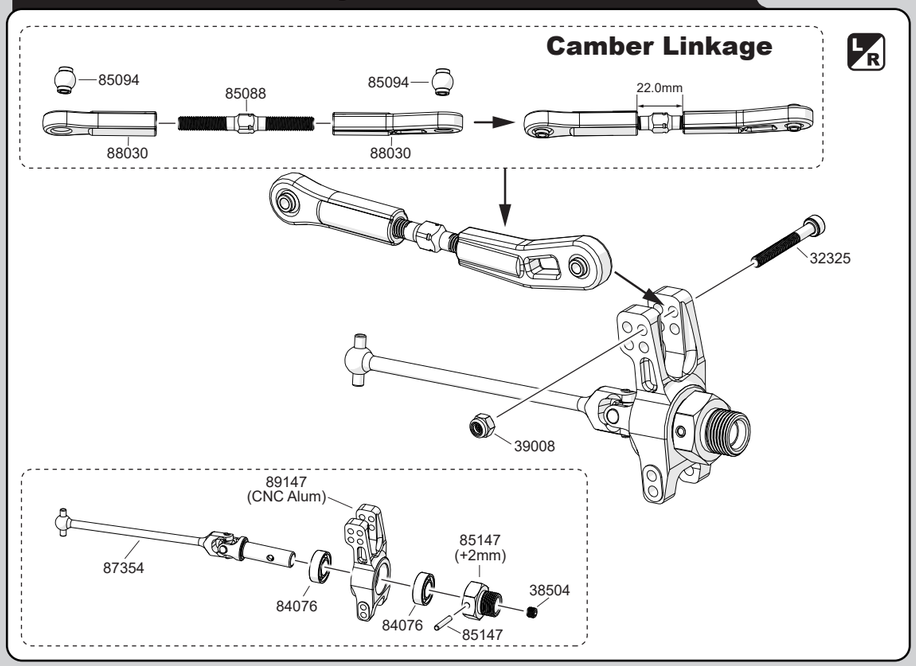

19

85152
M4x10 x2
Set Screw

39008
M3 Nut x2

90028
M3x50 x2
Cap Screw

Rear Hex Hub Assembly 2

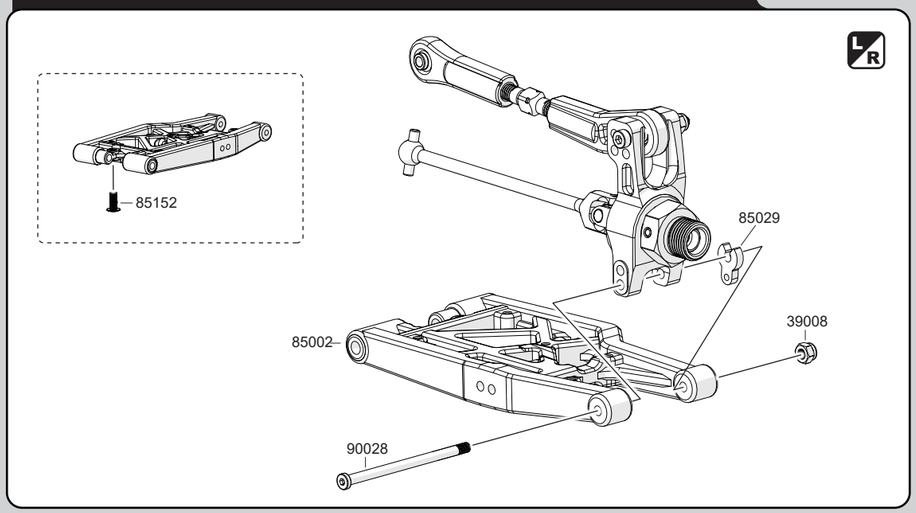

20

36212
M2.6x12 x2
Cap Screw

33312
M3x12 x4
B/H Screw

33315
M3x15 x4
B/H Screw

33415
M4x15 x2
B/H Screw

32320
M3x20 x2
Cap Screw

Rear Shock Tower Assembly

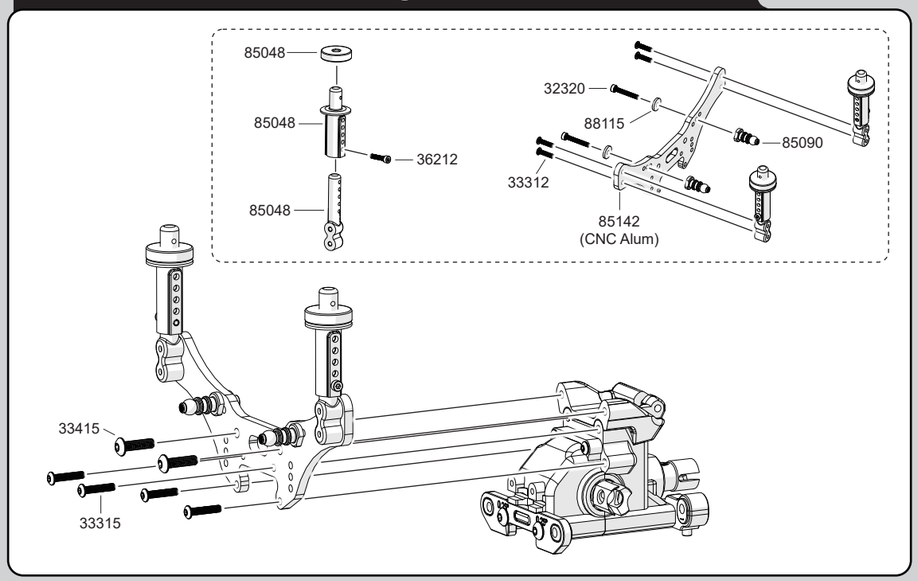

21

39008
M3 Nut x2

32320
M3x20 x2
Cap Screw

Rear Suspension Arm Assembly

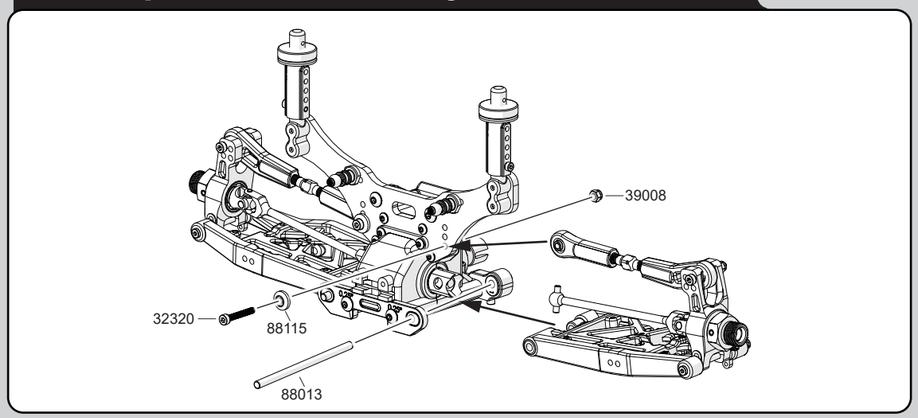

22

38303
M3x3 x2
Set Screw

32320
M3x20 x2
Cap Screw

Rear Sway Bar Assembly 1

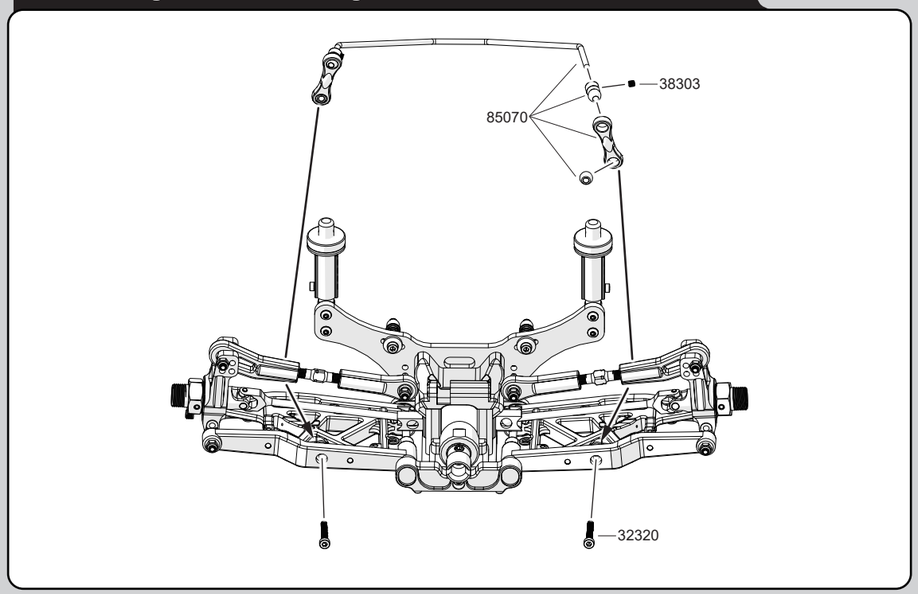

23

38304
M3x4 x2
Set Screw

33310
M3x10 x2
B/H Screw

Rear Sway Bar Assembly 2

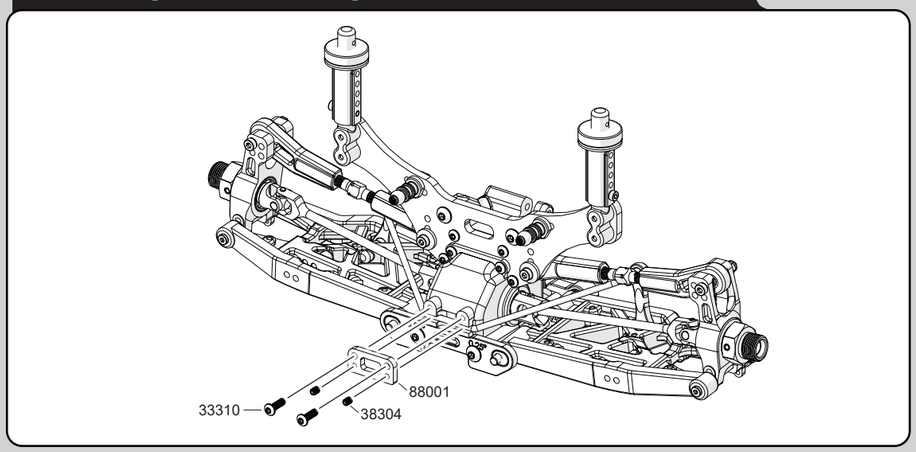

24

39008
M3 Nut x2

88034
M3x50 x1
Cap Screw

Rear Chassis Brace Assembly

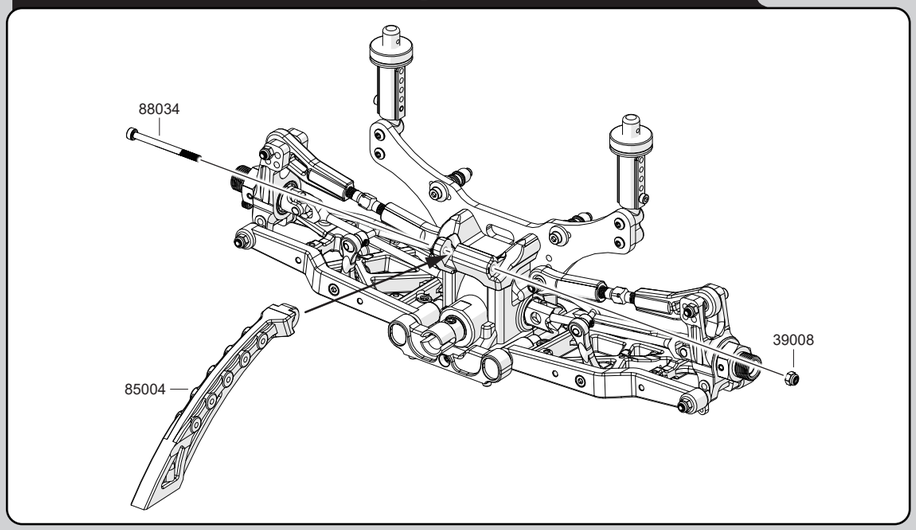

25

32310
M3x10 x2
Cap Screw

Rear Shock Assembly

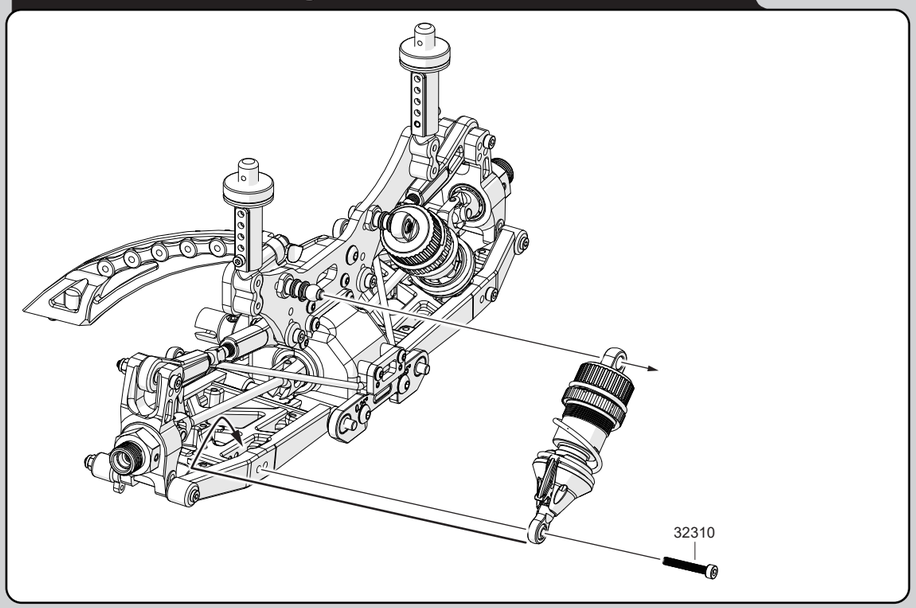

26

31410
M4x10 x2
F/H Screw

31414
M4x14 x1
F/H Screw

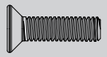
31416
M4x16 x4
F/H Screw

Rear Clip Assembly

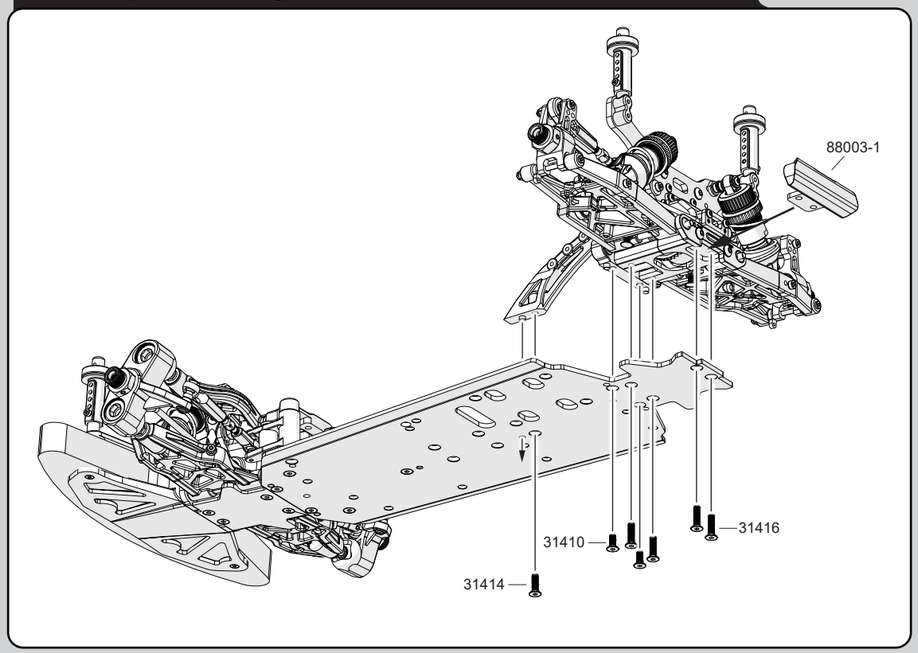

27

38505
M5x5 x4
Set Screw

31306
M3x6 x6
F/H Screw

33315
M3x15 x2
B/H Screw

2-Speed Clutch Assembly 1

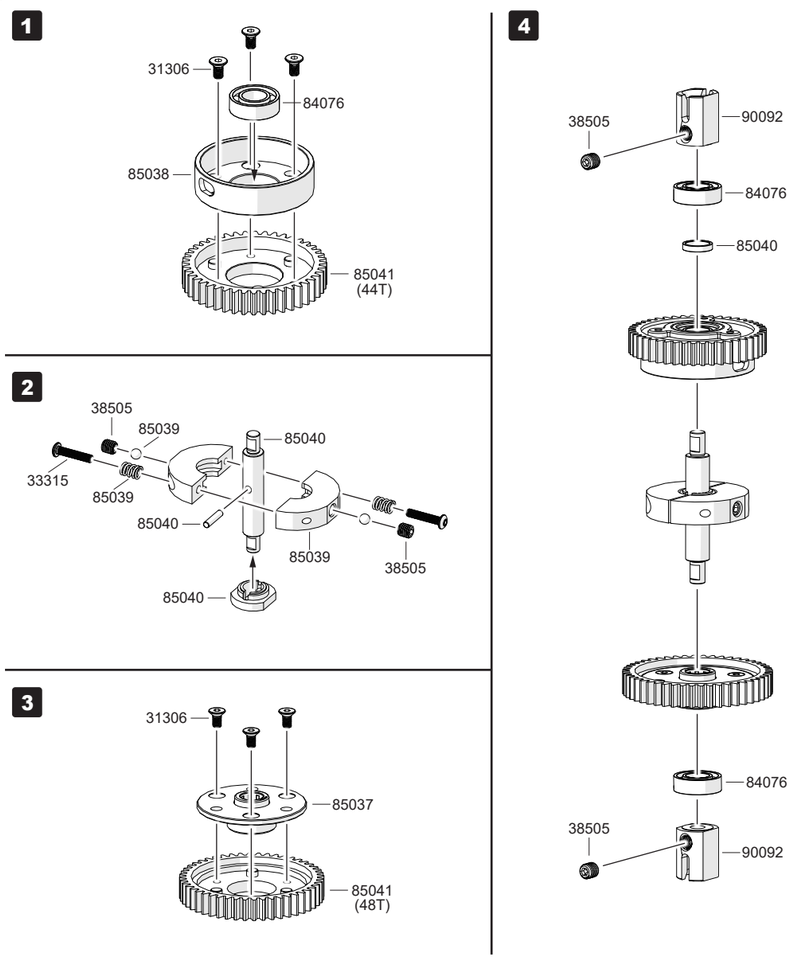

28

94003
M3x14.5 x4
Brake Screw

2-Speed Clutch Assembly 2

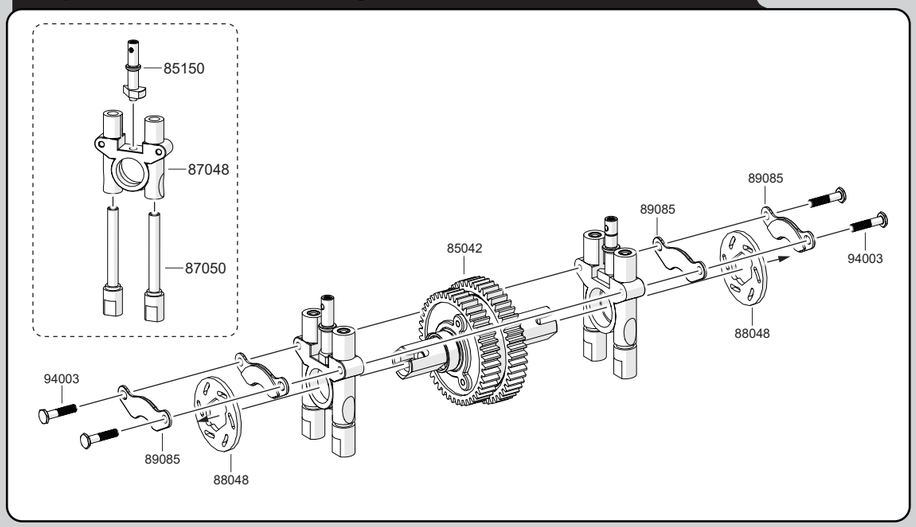

29

38303
M3x3 x2
Set Screw

33312
M3x12 x4
B/H Screw

2-Speed Clutch Assembly 3

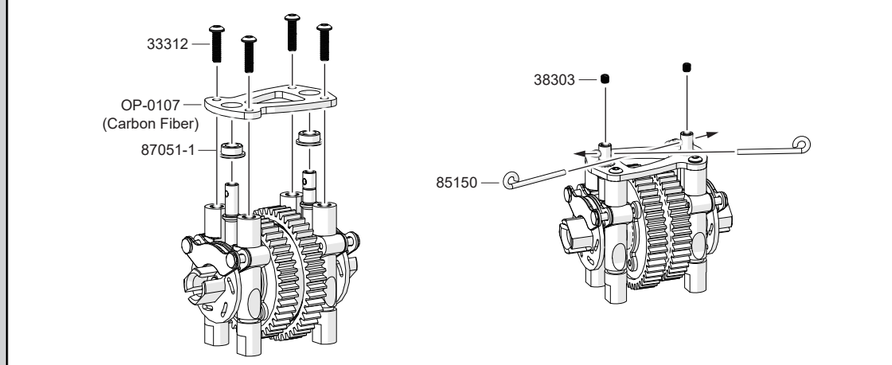

30

31410
M4x10 x4
F/H Screw

2-Speed Gear Unit And Center Drive Shaft Assembly

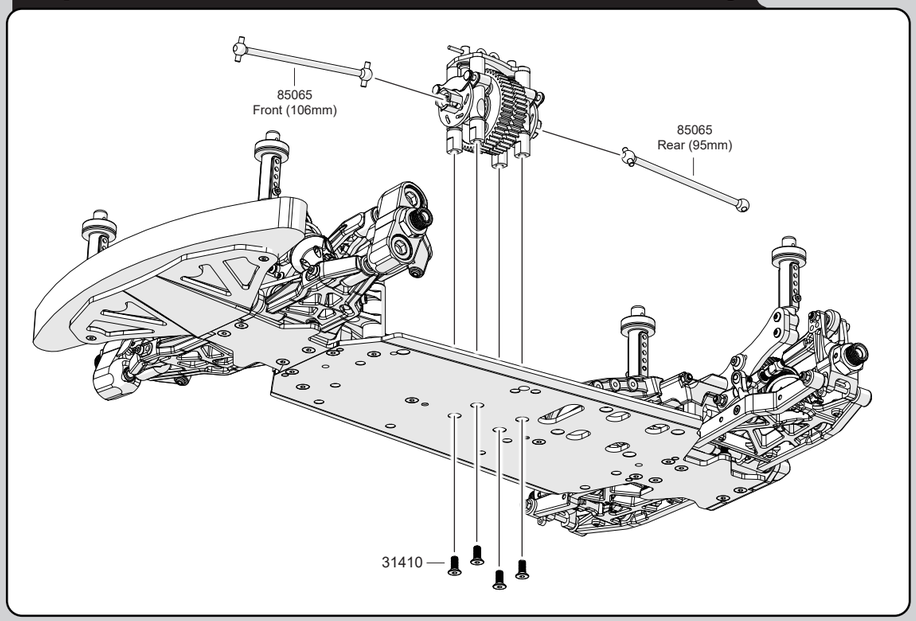

31

33210
M2x10 x2
B/H Screw

33306
M3x6 x1
B/H Screw

33312
M3x12 x11
B/H Screw

39004
M3 Nut x2

39008
Nylon Nut M3 x2

Servo Tray Assembly 1

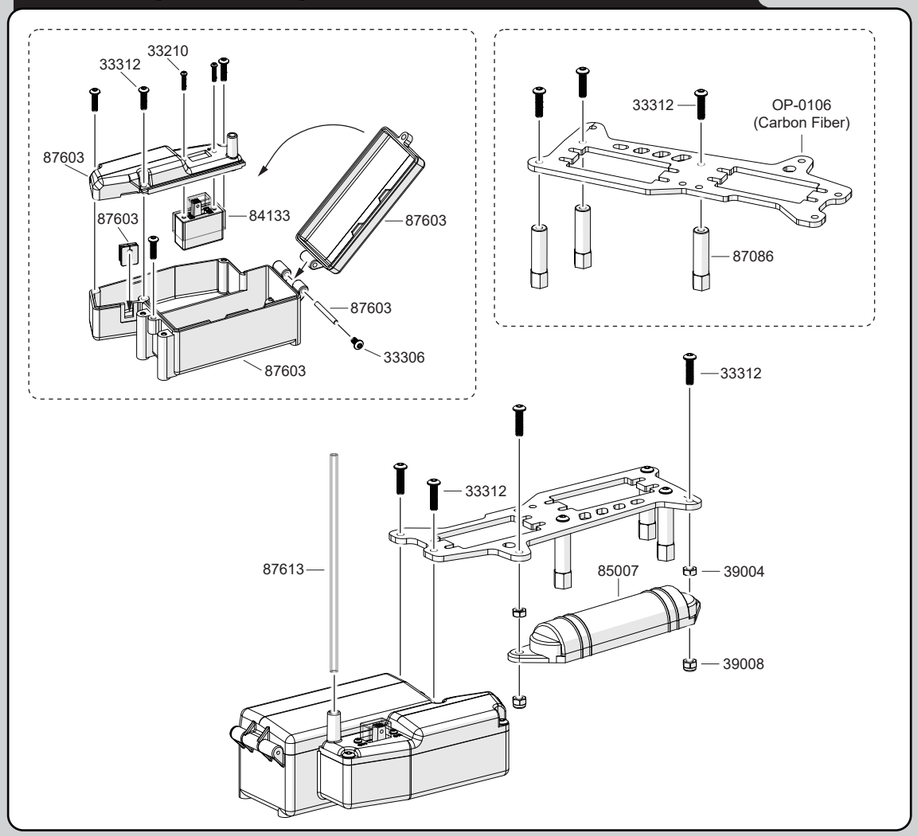

32

31312
M3x12 x1
F/H Screw

31318
M3x18 x1
F/H Screw

33308
M3x8 x3
B/H Screw

33312
M3x12 x8
B/H Screw

39008
Nylon Nut M3 x1

Servo Tray Assembly 2

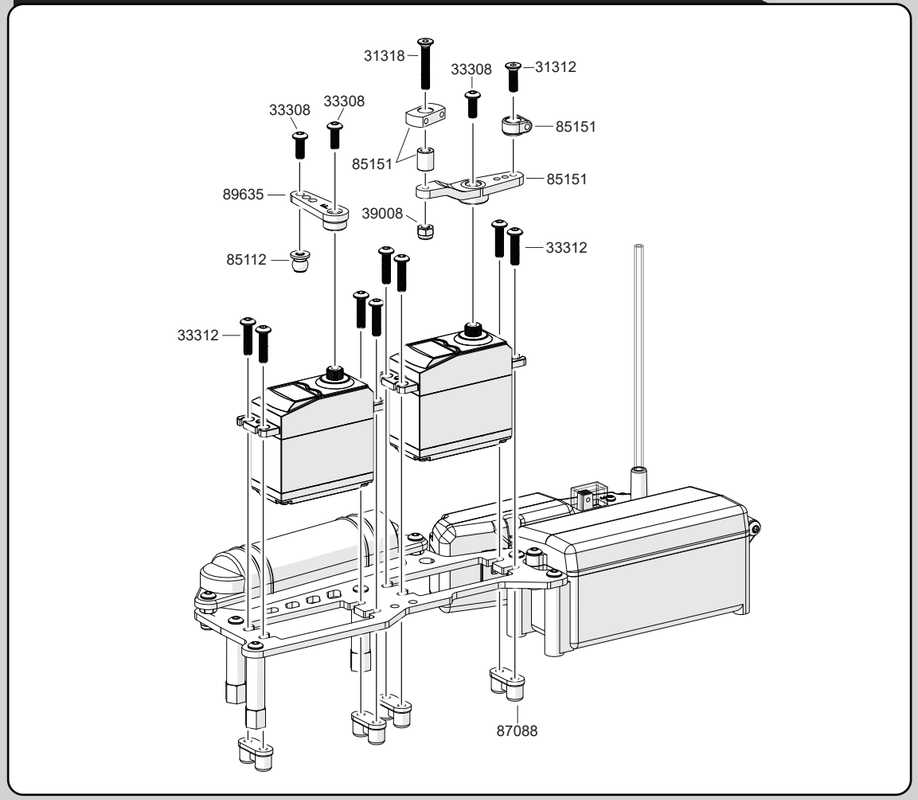

33

38303
M3x3 x4
Set Screw

33312
M3x12 x7
B/H Screw

Brake Linkage Assembly

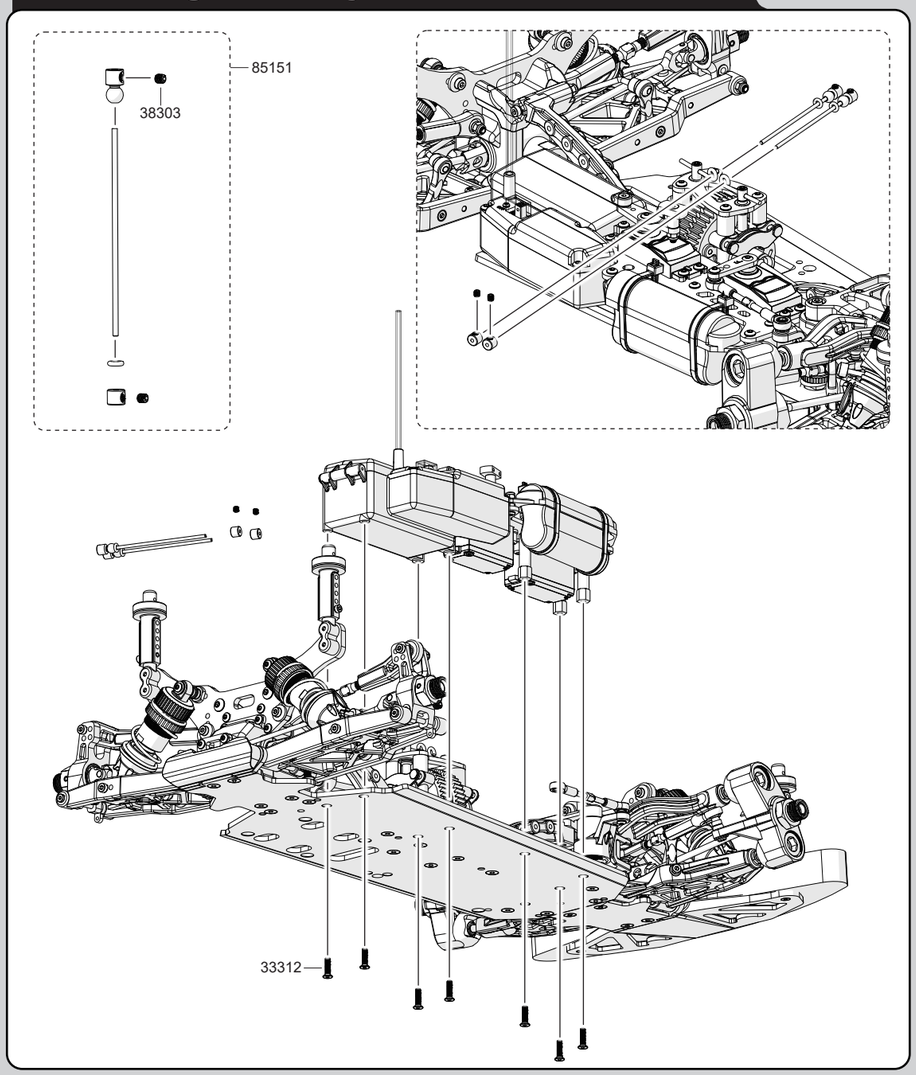

34

32308
M3x8 x1
Cap Screw

Engine Clutch Assembly

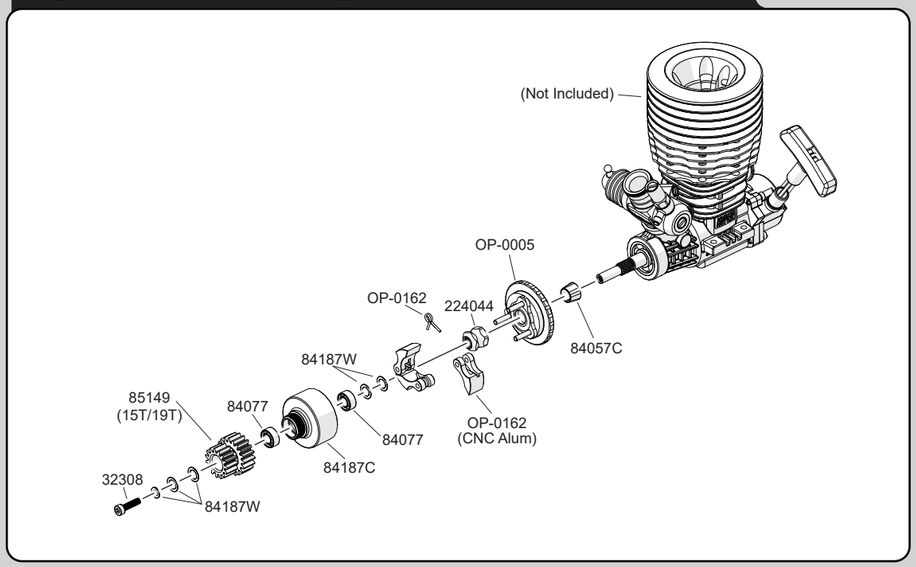

35

Engine Mount Assembly

32314
M3x14 x4
Cap Screw

39408
M4x8 x4
Engine Screw

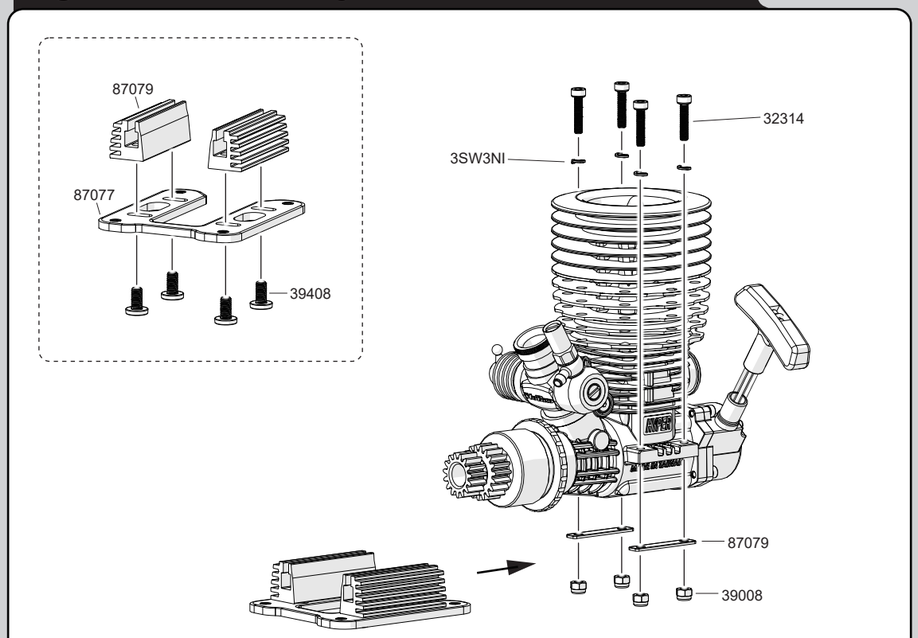

36

In-Line Muffler And Manifold Assembly

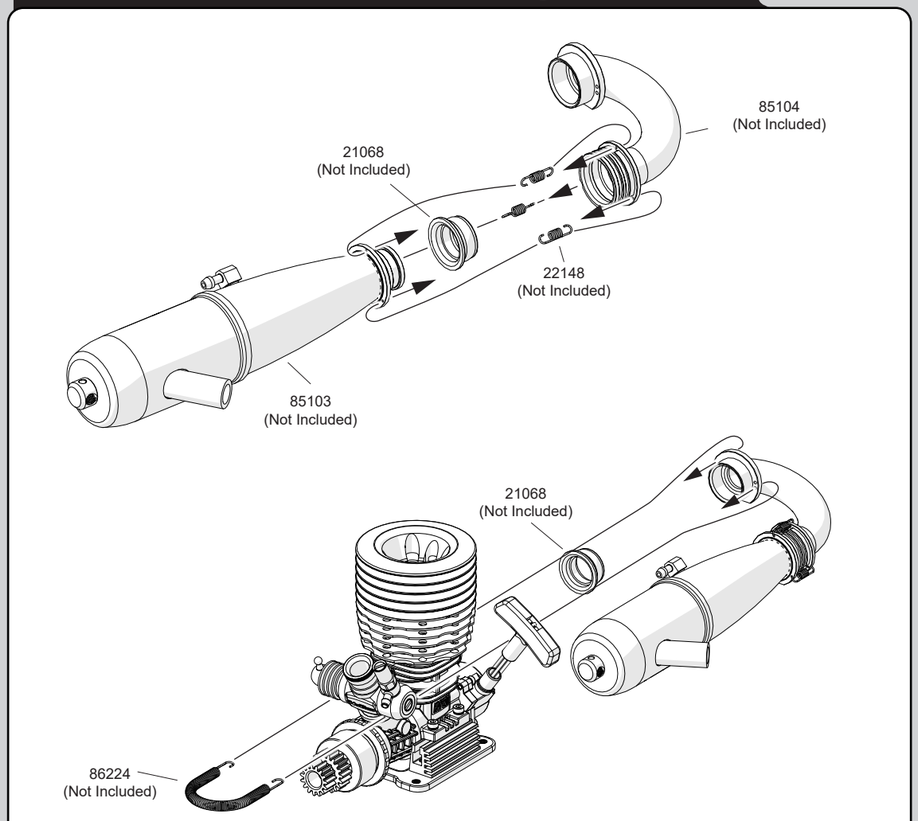

37

Air Filter And Holder Assembly

31310
M3x10 x2
F/H Screw

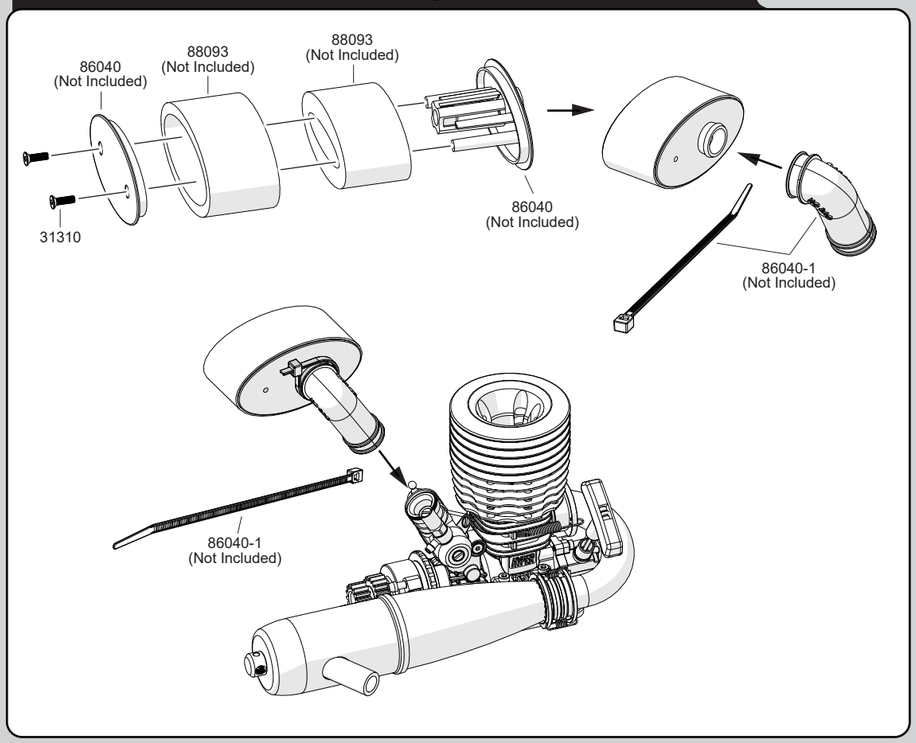

38

Engine Unit Assembly

38404
M4x4 x2
Set Screw

38406
M4x6 x2
Set Screw

38505
M5x5 x1
Set Screw

31408
M4x8 x2
F/H Screw

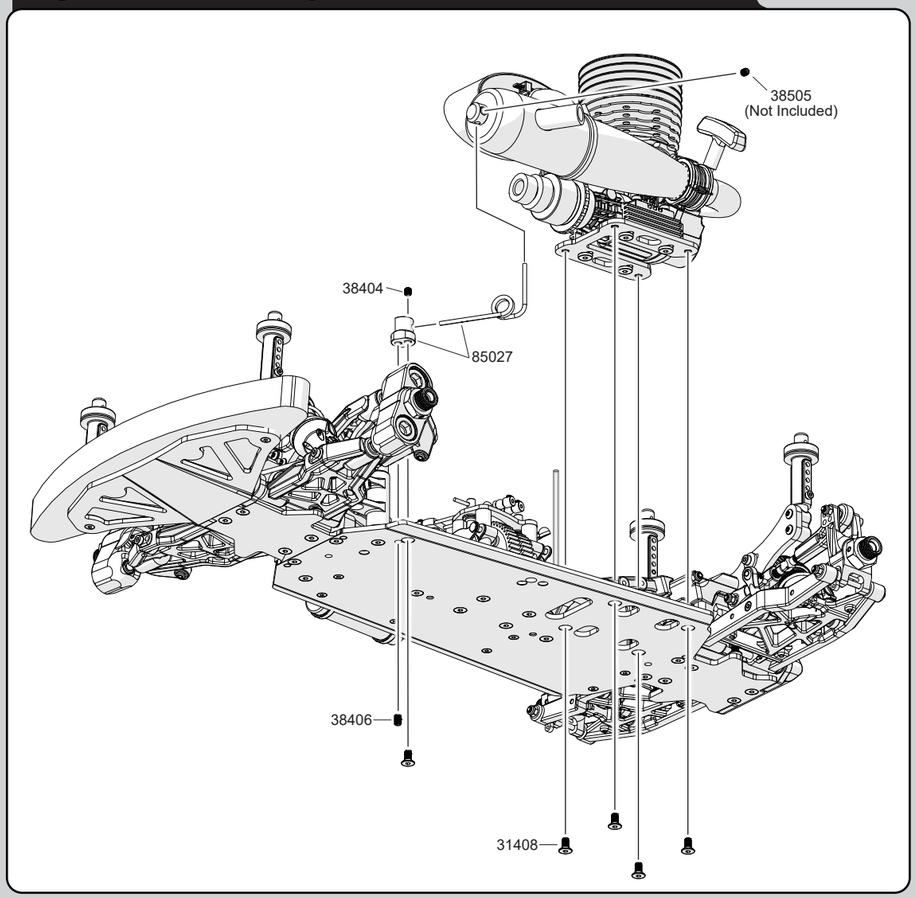

39

38303
M3x3 x2
Set Screw

Throttle Link Assembly

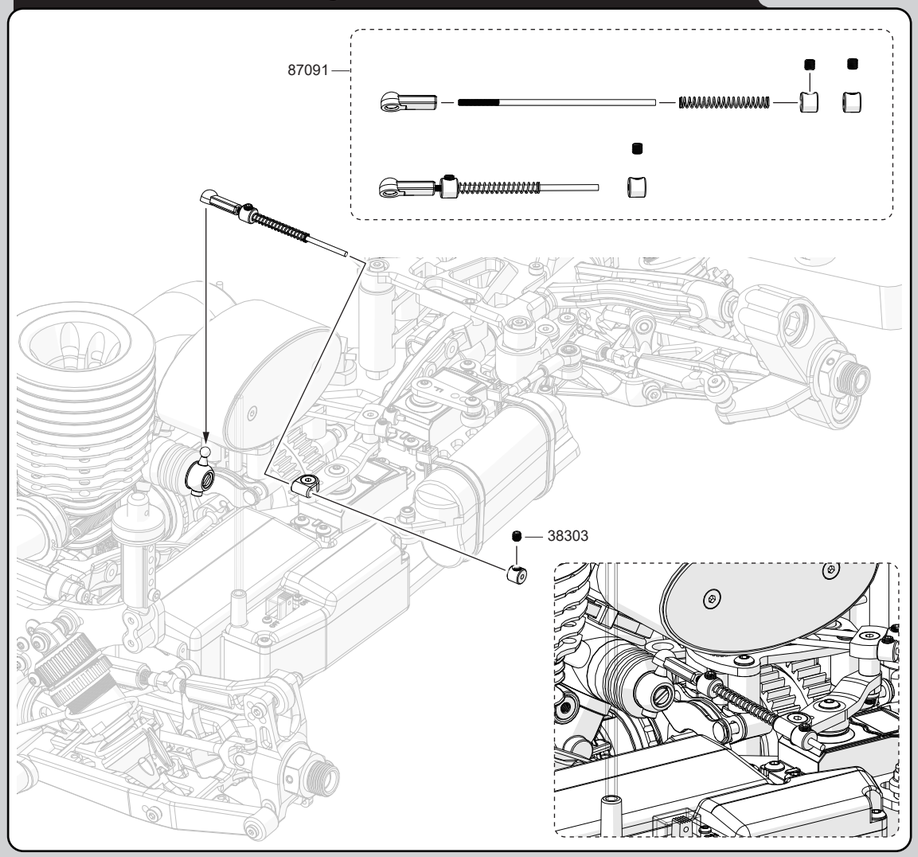

40

33310
M3x10 x1
B/H Screw

33312T
M3x12 x2
B/H Tap Screw

31310
M3x10 x2
F/H Screw

Fuel Tank Assembly

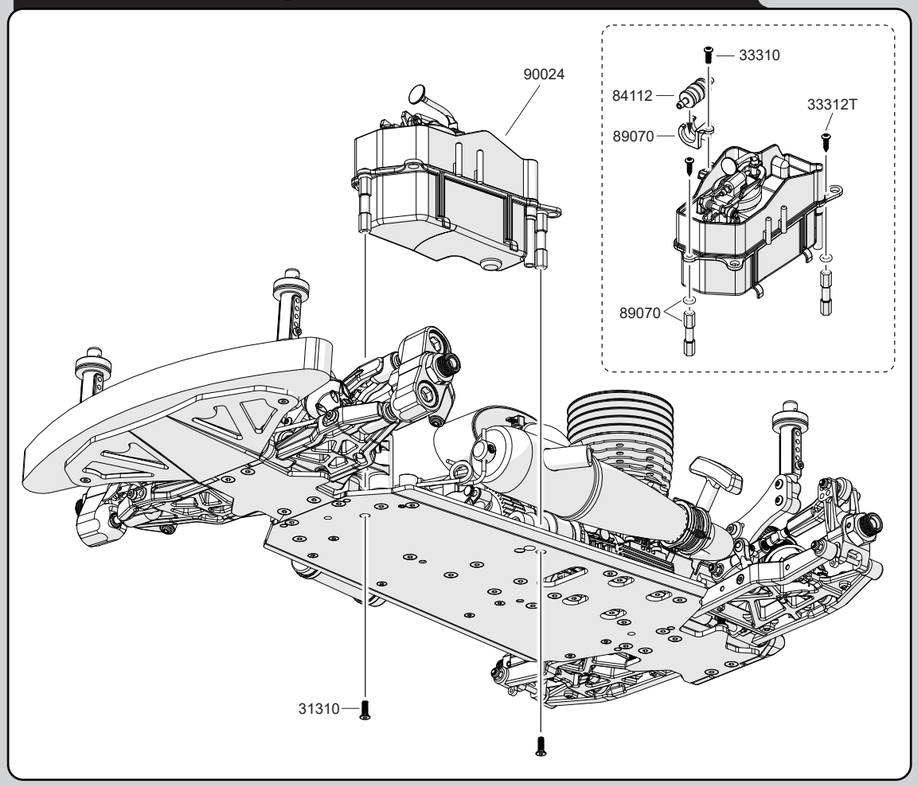

41

Tire Assembly

x4

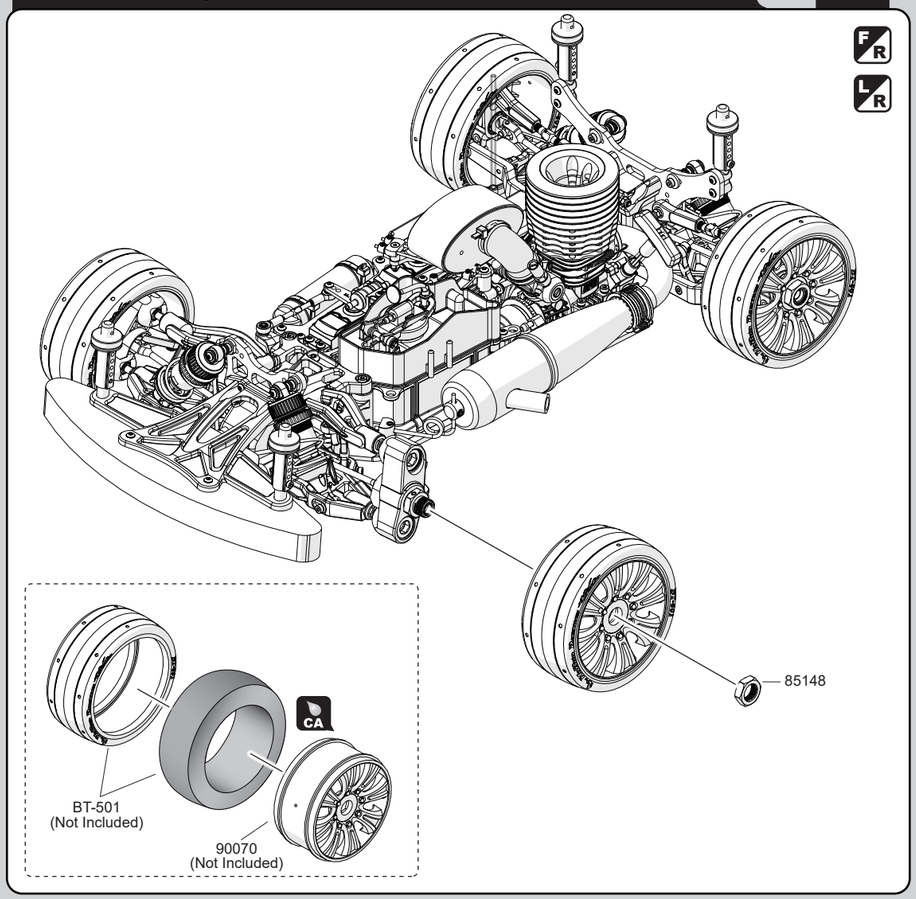

42

Assembled

This product does not contain body, engine, muffler, air filter, tires and wheels.

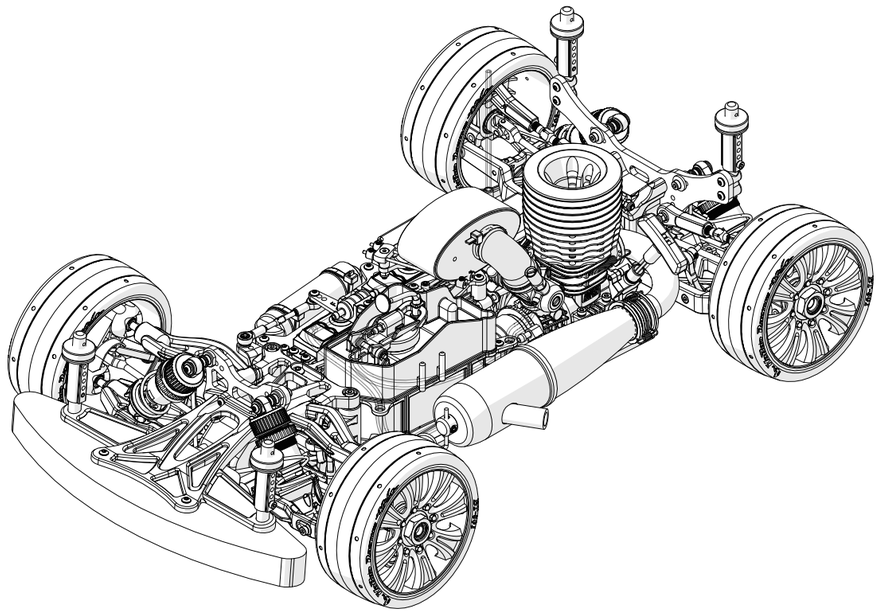

HYPER GT2 PARTS LIST

224044	84187C	85035	85059	85087	85112
2pcs			CNC Alum	3x43mm Alum 7075	5.8mm Alum 7075 4pcs
36101	84187W	85036	85060	85088	85113
5.8x1.9mm O-ring 10pcs	3x6x0.5mm 6pcs; 5x8x0.25mm 6pcs	2pcs 2pcs	CNC Alum	4x40mm Alum 7075 2pcs	
36813	85002	85037	85064	85089	85114
6.2x11.8x0.3 10pcs	Rear 2pcs	M3x6mm 3pcs	CNC Alum	5x50mm Alum 7075 2pcs	CNC Alum 7075 2pcs 2pcs
39057	85004	85038	85065	85090	85115
2.5x10.8mm 2pcs		M3x6mm 3pcs	Φ3.8x88mm; Φ3.8x97mm	6.8mm Alum 7075 4pcs	2pcs
84057C	85007	85039	85067	85091	85116
		2pcs; M3x15mm 2pcs; M3x3 Set Screw 2pcs; 2pcs; 2pcs	2pcs; 2.5x13.8mm Pin 2pcs	6.8mm Alum 7075 4pcs	
84062-1	85011	85040	85068	85092	85117
10pcs	4x43.5mm Pin 2pcs		3x43mm Alum 7075; Alum; 2pcs	6.8mm Alum 7075 4pcs	
84076	85022	85041	85069	85093	85126
8x16x5mm 4pcs	2pcs 2pcs	48T 44T	2pcs Alum; M3x3 Set Screw 2pcs; 2pcs Alum; Alum	6.8mm Alum 7075 4pcs	2pcs 2pcs
84078	85026	85042	85070	85094	85140
6x10x3mm 4pcs	2pcs 2pcs; 2pcs 2pcs		2pcs Alum; M3x3 Set Screw 2pcs; 2pcs; 2pcs Alum; Alum	7.8mm Alum 7075 4pcs	2pcs
84133	85027	85048	85078	85110	85141
	M4x4 Set Screw	2pcs 2pcs 4pcs	2pcs 4pcs	5.8x1.9x2mm O-ring 2pcs; M4x4 Set Screw	CNC Alum
84187	85029	85051	85082	85111	85142
3x6x0.5mm; M3x6; 5x8x0.25mm 4pcs; 5x10mm Bearing 2pcs	4pcs	4pcs	2pcs	M3x15 4pcs; 43T	CNC Alum

HYPER GT2 PARTS LIST

85143	85153	87086	87088	88002	89635	90079
CNC Alum	3.1x6x2.5 CNC Alum	3pcs	4pcs	M4x47 Screw 4pcs	M3x8 CNC Alum	2pcs
85144	87005-2	87091		88003-1	90024	90082
CNC Alum	6.1x13.9x0.15 Washer 6pcs	2pcs; M3x3 Set Screw 4pcs; 4pcs			Fuel Tank 150CC	2pcs
85145	87021	87206		88013	90028	90092
CNC Alum	2pcs; M4x4 Set Screw 2pcs			4x73mm Pin 4pcs	M3x50 2pcs	2pcs
85146	87027-1	87208		88030	90036	94003
2pcs; M5x4 Set Screw 2pcs; 2pcs; 2.5x16.8mm Pin 2pcs	2.5x16.8mm Pin 4pcs	8pcs		4pcs 4pcs	4x2mm O-ring 10pcs; 5pcs; 5pcs	M3x14.5 2pcs
85147	87028	87209		88034	90047	94117
2pcs (+2mm); 2pcs; M5x4 Set Screw 2pcs; 2.5x16.8mm Pin 2pcs	13T	4pcs		M3 Nut; M3x50 Screw	4pcs	2pcs; 2.5x10.8mm 2pcs; 2pcs; 6.1x13.9x0.15 Washer 2pcs; 4pcs; 4.1x8x0.1 Washer 4pcs
85148	87048	87354		88048	90048	OP-0005
4pcs	2pcs 2pcs	2pcs		2pcs	4pcs	
85149	87050	87375		88115	90049	OP-0106
15T/19T	4pcs	6pcs		6pcs	4pcs; 4pcs; 4pcs; 4pcs; 4pcs	Carbon Fiber
85150	87051-1	87603		89085	90052	OP-0107
M3x3 Set Screw 2pcs; 2pcs	4pcs	M3x6mm; 2.5x22.8mm Pin		2pcs 2pcs	2pcs	Carbon Fiber
85151	87077	87613		89147	90053	OP-0162
M3x6mm; M3 Nut; M3x20mm; 2pcs; 2pcs; M3x3 Set Screw 4pcs; 2.8x1.9mm O-ring 2pcs; 2pcs	M4x8mm 4pcs	Antenna tube 6pcs		CNC Alum	2pcs	Φ1.1mm 3pcs; Φ1.0mm 3pcs; CNC Alum 3pcs
85152	87079	88001		89604	90071	OP-0163 / OP-0164
M4x10 Set Screw 5pcs	M3x14mm 4pcs; M3 Nut 4pcs; M4x8mm Engine Screw 5pcs; 2pcs; 2pcs			4pcs; 4pcs; 2pcs; 6pcs	M3 Nut 2pcs; 2pcs; 3.1x7x0.25mm 2pcs	Φ1.0mm 3pcs / Φ1.1mm 3pcs

HYPER GT2 PARTS LIST

STANDARD PARTS

22148	3 SPRINGS FOR CONNECTING MANIFOLD	85094	ALUM 7075 FLANGED BALL - 7.8MM	88034	REAR WING MOUNT
224044	FLYWHEEL NUT	85110	NEW DIFFERENTIAL CASE SET	88048	BRAKE DISC
36101	O-RING 5.8x1.9MM	85111	NEW CROWN GEAR 43T FOR # 85110	88115	ALUM COLLAR FOR SHOCK TOWER
36813	SPACER 6.2x11.8x0.3MM	85112	ALUM 7075 FLANGED BALL - 5.8MM	89085	BRAKE PAD
39057	PIN 2.5x10.8MM	85113	NEW SERVO SAVER ARM	89147	CNC ALUM REAR WHEEL HUB
84057C	FLYWHEEL COLLAR, 2PCS	85114	CNC ALUM 7075 STEERING RACK SET	89604	STEERING PIVOT BALL SET
84062-1	BODY FOAM SPACER	85115	SERVO SAVER POST SET	89635	CNC ALUM FUTABA SERVO HORN (25T)
84076	BEARING 8x16x5MM	85116	FRONT UPPER ARM	90024	FUEL TANK 150 CC
84078	BEARING 6x10x3MM	85117	FRONT LOWER ARM	90028	SCREW 3x50MM
84133	SWITCH COVER	85126	FRONT BODY POST	90036	SHOCK ABSORBER REPAIR SET
84187	CLUTCH BELL SET	85140	SHOCK SPRING- HARD/ ORANGE, 2PCS	90047	SHOCK PISTON
84187C	CLUTCH BELL FOR 2-SPEED	85141	HYPER GT2 CNC ALUM CHASSIS	90048	SHOCK BLADDER
84187W	CLUTCH BELL WASHER	85142	CNC ALUM REAR SHOCK TOWER	90049	SHOCK NYLON SET
85002	REAR LOWER ARM SET	85143	CNC ALUM LIGHTWEIGHT FRONT UPPER ARM MOUNT	90052	SHOCK CAP TOP
85004	FRONT/REAR CHASSIS BRACE SET	85144	CNC ALUM REAR LOWER ARM HOLDER(RR)- 0.25 DEG./ +4MM	90053	SHOCK CAP BOTTOM
85007	EXTRA BATTERY COMPARTMENT FOR LIPO	85145	CNC ALUM REAR LOWER ARM HOLDER(RF) +4MM	90071	FRONT SHOCK SHAFT
85011	PIN 4x43.5MM	85146	17mm WHEEL HEX HUB SET	90079	FRONT SHOCK BODY
85022	STEERING KNUCKLE ARM	85147	17MM +2MM WHEEL HEX HUB SET	90082	FRONT/REAR SHOCK ABSORBER SET
85026	ADJUSTABLE ARM INSERT	85148	17MM ANTI LOOSE WHEEL HEX NUT, 4PCS	90092	2-SPEED OUTDRIVE CUP
85027	MUFFLER MOUNT SET	85149	2-SPEED PINION GEAR 15T/19T	94003	M3x4.5 HEX HEAD SHOULDER BOLT, 4PCS
85029	ARM SPACER	85150	BRAKE CAM SHAFT SET	94117	NEW BEVEL GEAR SET
85035	VT FRONT BUMPER FOAM	85151	THROTTLE SERVO HORN SET	OP-0005	LIGHT WEIGHT FLYWHEEL
85036	VT FRONT BUMPER SET WITH BODY POST	85152	DROOP SCREW, 5PCS	OP-0106	CARBON FIBER RADIO TRAY
85037	VT 2-SPEED GEAR HOUSING - 1st FOR GP	85153	CNC ALUM BUSHING 3.1x6 x2.5mm, 5PCS	OP-0107	CARBON FIBER CENTER DIFFERENTIAL TOP PLATE
85038	VT 2-SPEED GEAR HOUSING - 2nd FOR GP	87005-2	SPACER 6.1x13.9x0.15MM	OP-0162	CNC ALUM CLUTCH SHOES
85039	VT 2-SPEED CLUTCH SET FOR GP	87021	OUTDRIVE CUP	OP-0163	CLUTCH SPRING - 1.0MM
85040	VT 2-SPEED SHAFT AND ADAPTOR FOR GP	87027-1	PIN 2.5x16.8MM, 4PCS	OP-0164	CLUTCH SPRING - 1.1MM
85041	VT 2-SPEED SPUR GEAR 44T/48T FOR GP	87028	DIFFERENTIAL PINION GEAR 13T		
85042	VT 2-SPEED SET FOR GP	87048	CENTER DIFFERENTIAL MOUNT		
85048	VT REAR BODY POST	87050	CENTER DIFFERENTIAL MOUNT POST		
85051	SHOCK BOOT, 4 PCS	87051-1	BRAKE CAM SPACER		
85059	CNC ALUM FRONT LOWER ARM HOLDER (FR)	87077	ENGINE MOUNT PLATE		
85060	CNC ALUM FRONT SHOCK TOWER- 4MM	87079	ENGINE MOUNT		
85064	CNC ALUM FRONT LOWER ARM HOLDER (FF)	87086	RADIO TRAY POST		
85065	CENTER DRIVE SHAFT SET	87088	SERVO MOUNTING HOLDER		
85067	LIGHTWEIGHT DIFFERENTIAL OUTDRIVE CUP	87091	THROTTLE LINKAGE SET		
85068	ALUM 7075 SERVO LINKAGE SET FOR STEERING	87206	PIVOT BALL FRONT STEERING HUB		
85069	FRONT SWAY BAR SET	87208	PIVOT BALL PLASTIC BALL WASHER/SPACER		
85070	REAR SWAY BAR SET	87209	PIVOT BALL NUT		
85078	ADJUSTABLE ARM RETAINER CLIP	87354	FRONT UNIVERSAL JOINT DRIVESHAFT		
85082	WASHER FOR SERVO SAVER	87375	BODY CLIP		
85087	ALUM 7075 TURNBUCKLE 3X43MM	87603	BATTERY BOX		
85088	ALUM 7075 TURNBUCKLE 4X40MM	87613	ANTIENNA TUBE, 6 PCS		
85089	ALUM 7075 TURNBUCKLE 5X50MM	88001	GEAR BOX		
85090	ALUM 7075 SHOCK BALL - 6.8MM	88002	HEX SCREW 4x47MM		
85091	ALUM 7075 BALL - 6.8MM	88003-1	REAR BUMPER		
85092	ALUM 7075 FLANGED BALL - 6.8MM	88013	ARM SHAFT 4x73MM		
85093	ALUM 7075 FLANGED BALL - 6.8MM	88030	REAR UPPER ARM PLASTIC ROD END		

HYPER GT2 PARTS LIST

SCREW

31306	M3x6 FLAT HEAD SCREW
31310	M3x10 FLAT HEAD SCREW
31312	M3x12 FLAT HEAD SCREW
31315	M3x15 FLAT HEAD SCREW
31318	M3x18 FLAT HEAD SCREW
31320	M3x20 FLAT HEAD SCREW
31322	M3x22 FLAT HEAD SCREW
31408	M4x8 FLAT HEAD SCREW
31410	M4x10 FLAT HEAD SCREW
31414	M4x14 FLAT HEAD SCREW
31416	M4x16 FLAT HEAD SCREW
32306	M3x6 CAP HEAD SCREW
32310	M3x10 CAP HEAD SCREW
32312	M3x12 CAP HEAD SCREW
32314	M3x14 CAP HEAD SCREW
32320	M3x20 CAP HEAD SCREW
32325	M3x25 CAP HEAD SCREW
33210	M2x10 BUTTON HEAD SCREW
33306	M3x6 BUTTON HEAD SCREW
33308	M3x8 BUTTON HEAD SCREW
33310	M3x10 BUTTON HEAD SCREW
33312	M3x12 BUTTON HEAD SCREW
33315	M3x15 BUTTON HEAD SCREW
33318	M3x18 BUTTON HEAD SCREW
33412	M4x12 BUTTON HEAD SCREW
33415	M4x15 BUTTON HEAD SCREW
36212	M2.6x12 CAP HEAD SCREW
38303	M3x3 SET SCREW
38304	M3x4 SET SCREW
38404	M4x4 SET SCREW
38406	M4x6 SET SCREW
38504	M5x4 SET SCREW
38505	M5x5 SET SCREW
39004	M3 NUT
39008	M3 NYLON NUT

OPTIONAL PARTS

21068	SILICONE MANIFOLD SEAL, 2 PCS
22148	3 SPRINGS FOR CONNECTING MANIFOLD
85103	NEW IN-LINE MUFFLER
85104	NEW MANIFOLD SET
86040	AIR FILTER BASE AND CAP
86040-1	AIR FILTER INTAKE TUBE
86224	MANIFOLD SPRING
88093	AIR FILTER FOAM
90070	VT/GT WHEEL
BT-501	VT/GT NEW TIRES WIHT INSERT
OP-0040	2-SPEED PINION GEAR 17T/21T
OP-0041	2-SPEED PINION GEAR 18T/22T
OP-0042	2-SPEED PINION GEAR 19T/23T
OP-0043	2-SPEED PINION GEAR 20T/24T
OP-0090	DOUBLE LOCK WHEEL FLANGE HUB(HARD COATING), 2PCS
OP-0091	DOUBLE LOCK WHEEL FLANGE HUB(GOLD), 2PCS
OP-0092	DOUBLE LOCK WHEEL FLANGE HUB(BRONZE), 2PCS
OP-0110	HYPER VS FRONT STABILIZER SET(2.3mm/2.8mm/3mm)
OP-0111	HYPER VS REAR STABILIZER SET(2.3mm/2.5mm/3mm)
OP-0148	ALUM. DIFF CASE WITH COVER, GASKET, SCREWS
OP-0168	2-SPEED PINION GEAR 14T/18T
OP-0169	2-SPEED PINION GEAR 16T/20T
OP-0170	PIPE MOUNT WIRE

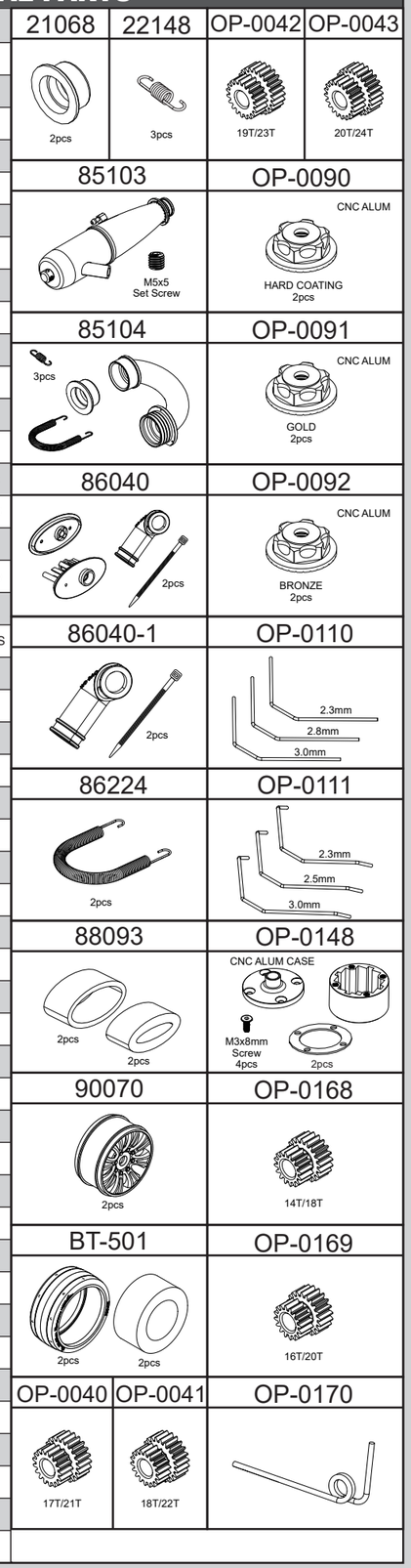

HYPER GT2
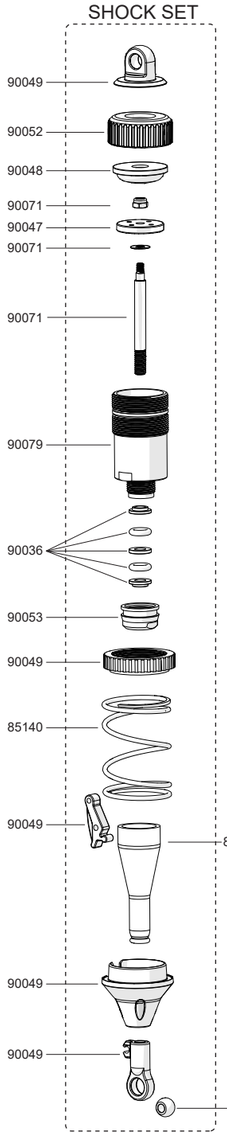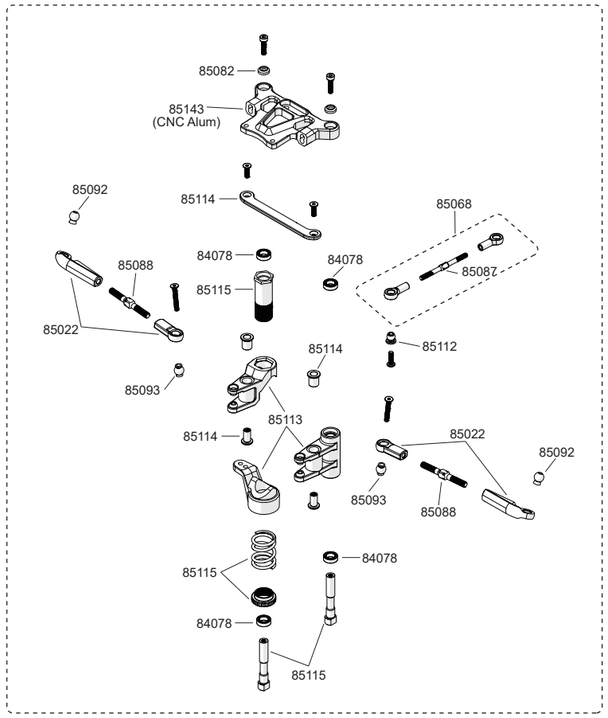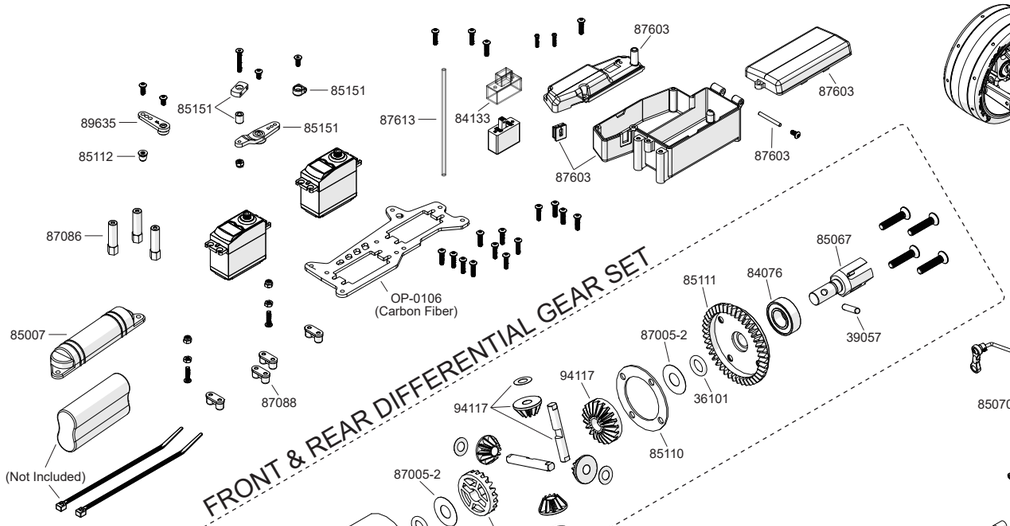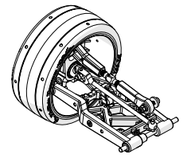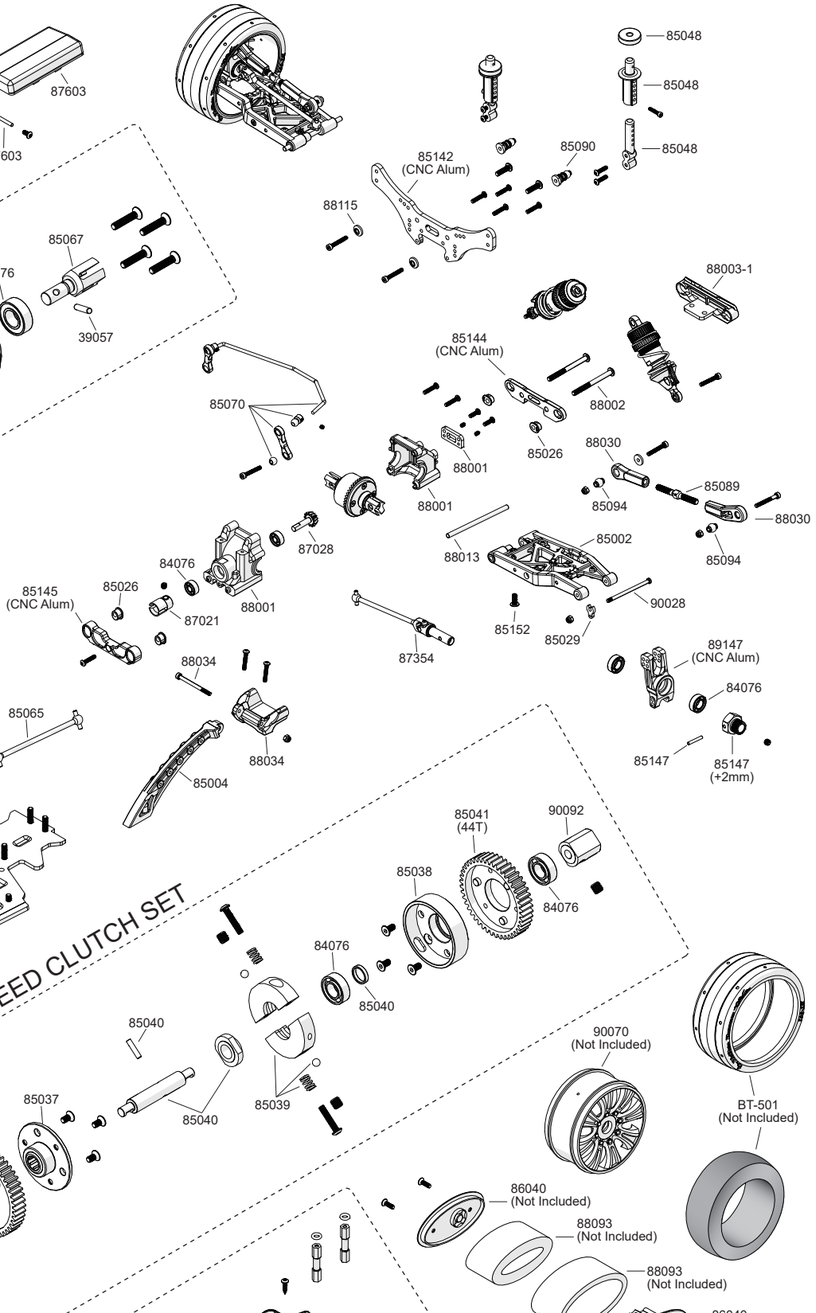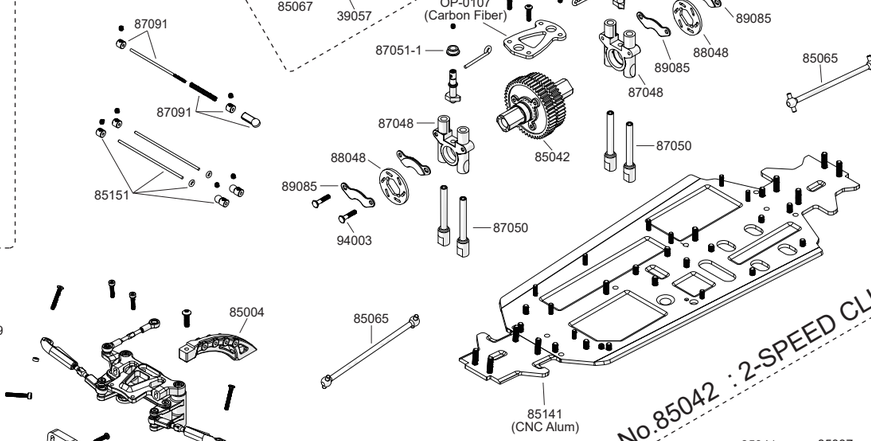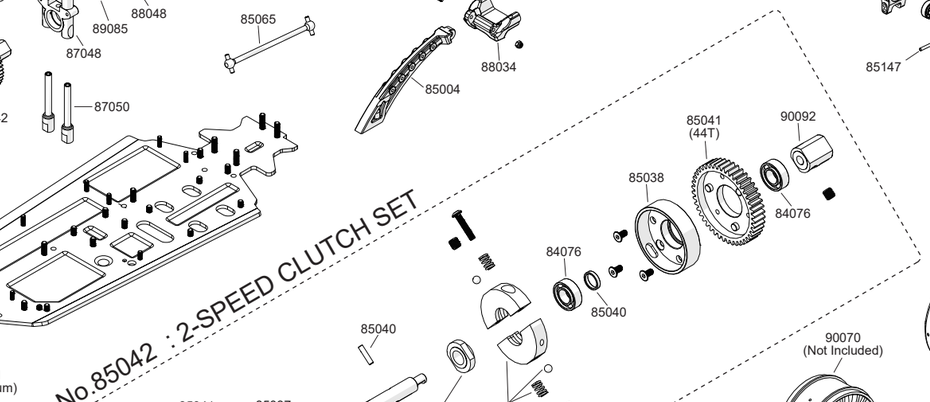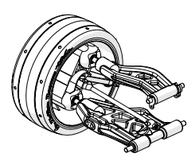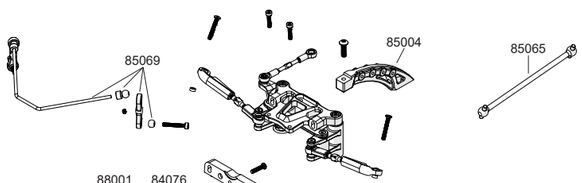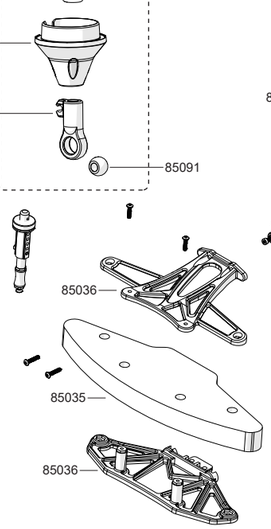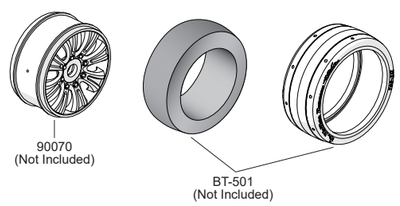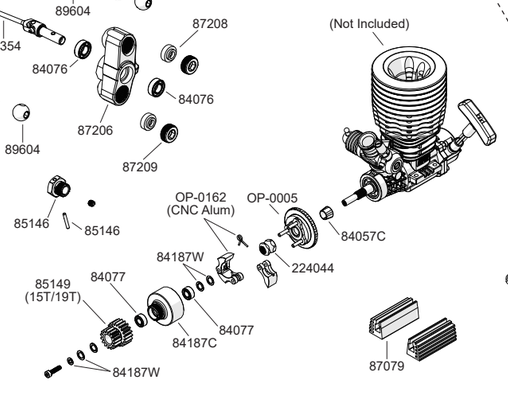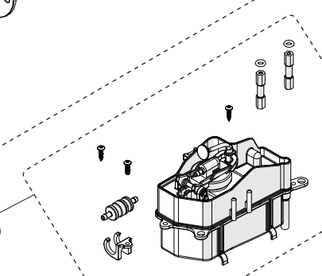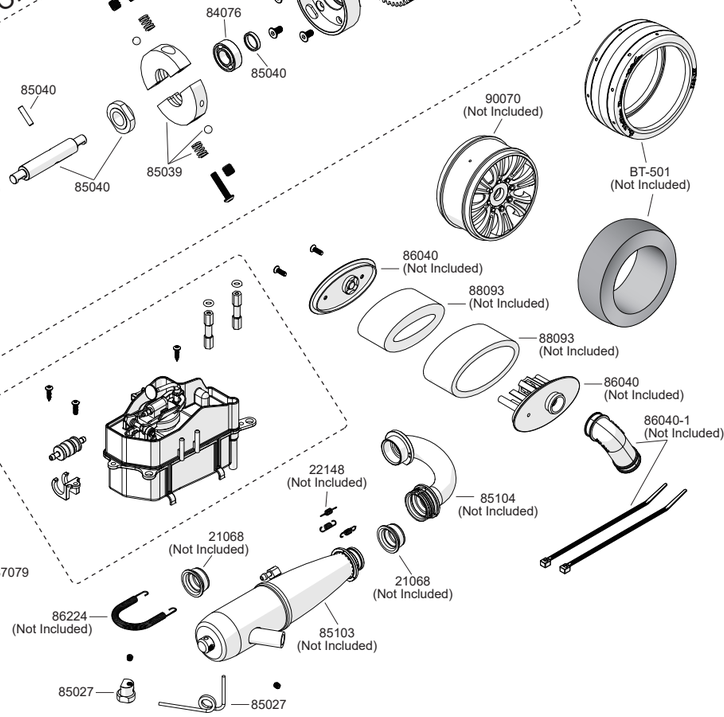
NO.90082
FRONT/REAR
SHOCK SET